ROLAND®

THICKNESS GAUGING

Innovation **IS OUR LIFE**

The LTM Thickness Gauging Systems from ROLAND ELECTRONIC GmbH are used for the non contact measurement of various moving materials with a very high accuracy, in µm range.
The combination of state-of-the-art laser and system technology in conjunction with a software developed especially for this requirement allows the acquisition, evaluation, visualization and archiving of thickness and cross-sectional measured values for your application.

The systems were designed specifically for use in the metalworking industry and are used in rolling mills, longitudinal and cross-section plants, press lines, the can industry, metal sheet processing and many more.

LTM-ECO

LTM-BASE

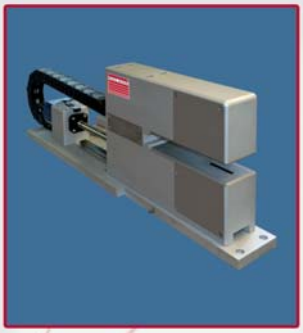

LTM-SMART

LTM-MAXI

LTM

THICKNESS GAUGING

DOUBLE SHEET CONTROL

NON-DESTRUCTIVE TESTING

WELD SEAM DETECTION

Basics

■ ROLAND Thickness Gauging Systems

Depending on the measuring tasks and the corresponding operating conditions, such as the specific installation situation and location, the required accuracy and environmental conditions you can selected from a wide range of ROLAND Thickness Gauging Systems.

■ Static and Dynamic Thickness Gauging

Basically, we distinguish two types of measurement systems.
In the case of static measuring system (e.g. **LTM-BASE**), the measuring point is unchanged with respect to the system. In the case of the dynamic measuring system (e.g. **LTM-SMART**), the measuring point can change its position and within the system it can be dependent on time or distance.

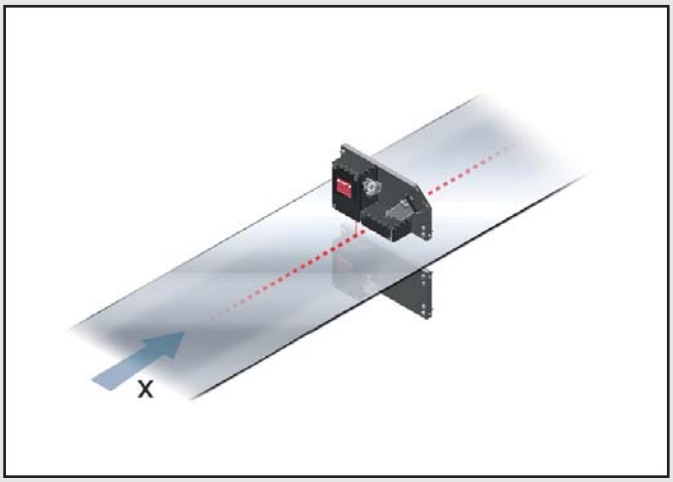

Static Thickness Gauging System

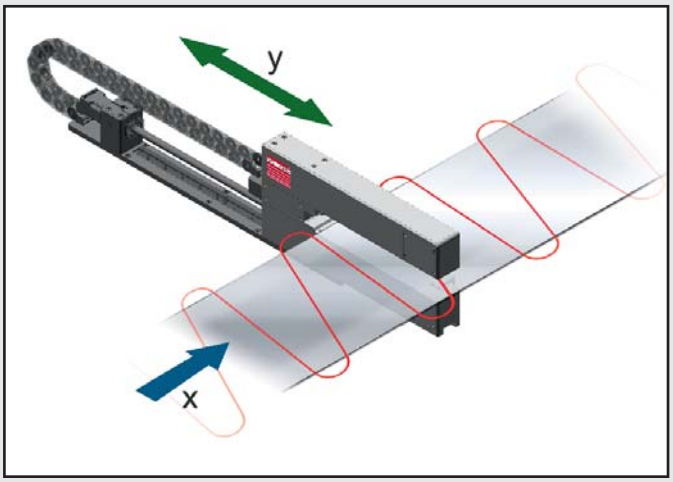

Dynamic Thickness Gauging System

■ Measurement modes of Thickness Gauging Systems

Depending on the requirements or the selected Thickness Gauging System, different measuring modes are available. These can be selected in the ROLAND measuring software **LTM-S** and stored with respect to the specific product. Dynamic measurement systems offer a wider range of measurement modes.

■ Line Measuring

The measuring system remains in the static state. The Y coordinate of the measuring system remains unchanged during the measuring process. As the material travels in the X direction, thickness measuring values are determined along a straight line.

■ Micro-Traversing

During **micro - traversing**, the Y - coordinate of the measuring system changes dynamically.
The system oscillates back and forth between two freely selectable Y coordinates (Y_1 and Y_2) at a constant speed. The resulting traversing path is always smaller than the current coil or material width. As the material moves in the X direction, thickness measurements are taken along a sinusoidal line. Only a partial area (strip or trace) of the material is measured.

Basics

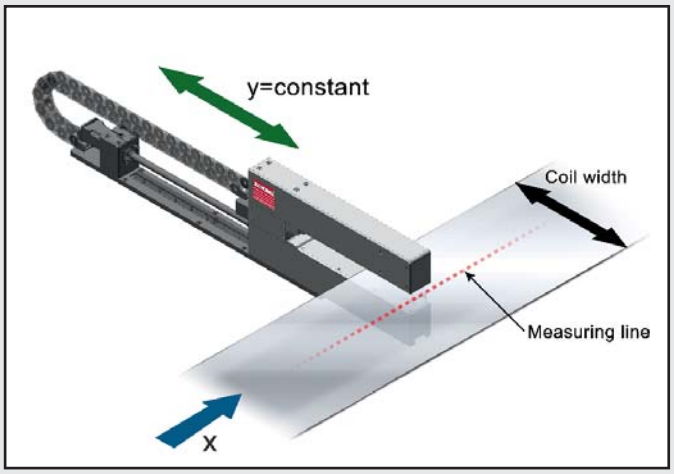

Line Measuring

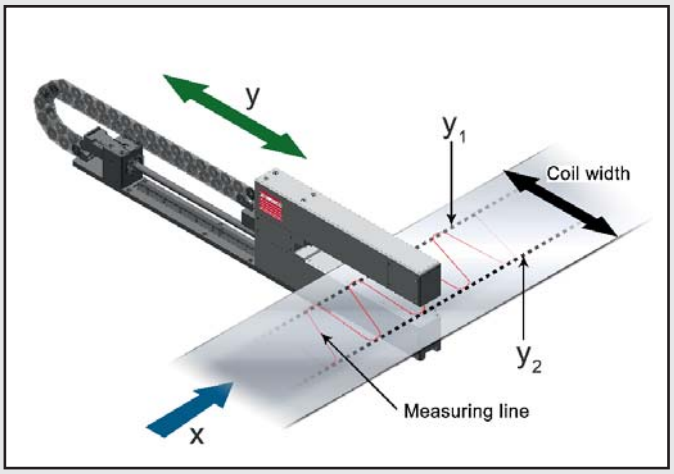

Micro-Traversing

■ Macro-Traversing

In the case of macro-traversing, the Y coordinate of the measuring system changes dynamically.
By doing that, the system oscillates back and forth between two fixed Y coordinates (Y_1 and Y_2) at a constant speed.
The two coordinates Y_1 and Y_2 result from the two edges of the current material to be measured. Only the movement of the material in the X direction produces thickness measurements along a determined sinusoidal line. It is measured over the entire strip or material width.

■ Macro-Traversing with track measuring

The macro-traversing with track measurement basically works as described above.
In addition, the **LTM-S** measuring software can be used to subdivide the material into subareas (tracks).
Each track has two unique Y coordinates (Y_S, Y_E), which determine the track width.
It is thus possible to hide tracks (partial areas) during the measurement, or to include only relevant tracks for further processing in the measurement data evaluation.

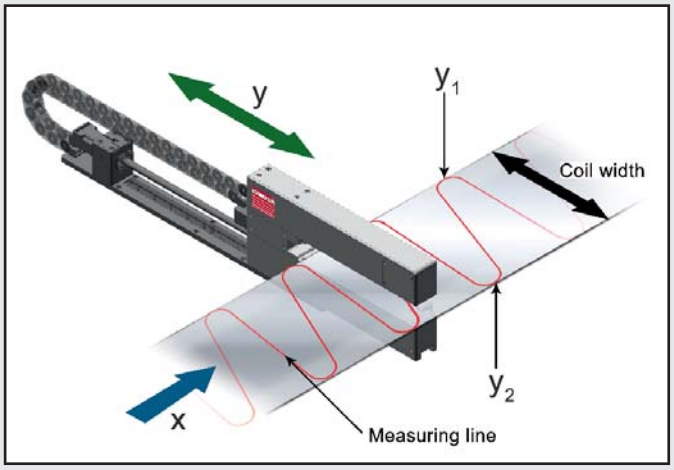

Macro-Traversing

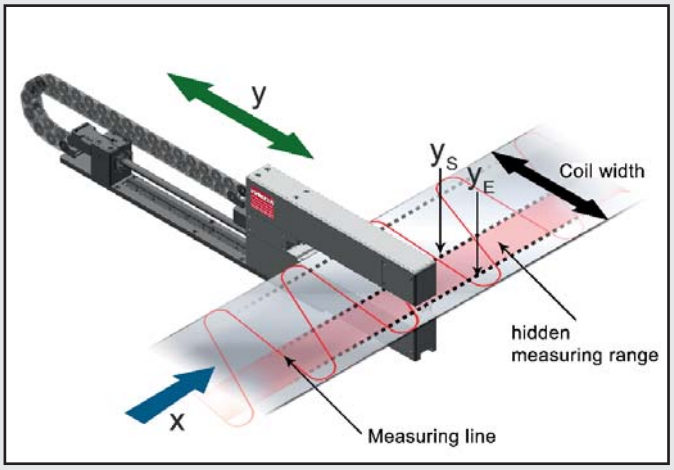

Macro-Traversing with track measuring

Basics

Principle of Thickness Gauging via Laser Triangulation

The lasers used in the ROLAND Thickness Gauging Systems function according to the principle of triangulation. That means a distance determination by simple trigonometric function.A laser spot is projected onto the material surface. Depending on the distance of the material surface, the reflected laser beam meets the receiving element of the laser at a certain angle. From this angle and the fixed distance of the laser source to the receiver part, the distance of the laser to the material surface can be determined. Within ROLAND Thickness Gauging Systems, a measuring point always consists of two laser sensors, which are positioned exactly opposite one another between which the material to be measured is guided through. Each laser sensor individually measures the distance to the material surface (A_1 or A_2). The thickness „d“ of the material is obtained by subtracting the sum of the measured values (A_1 and A_2) from the installation distance (A_x).

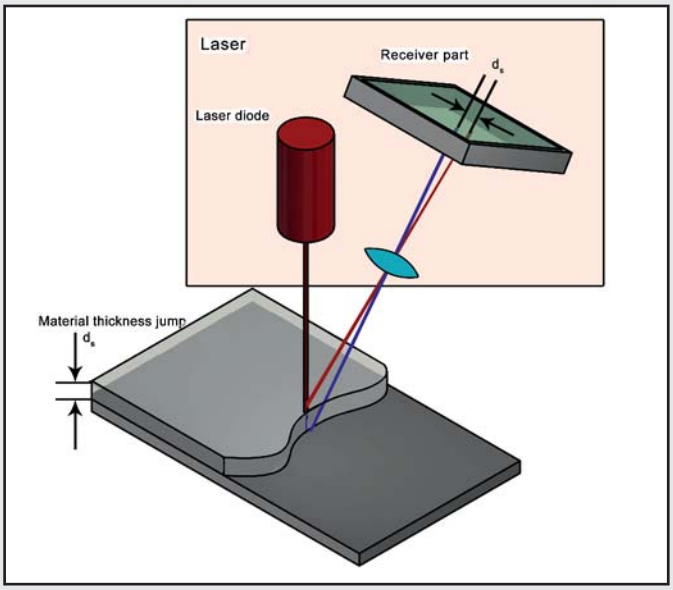

The basic principle of laser triangulation

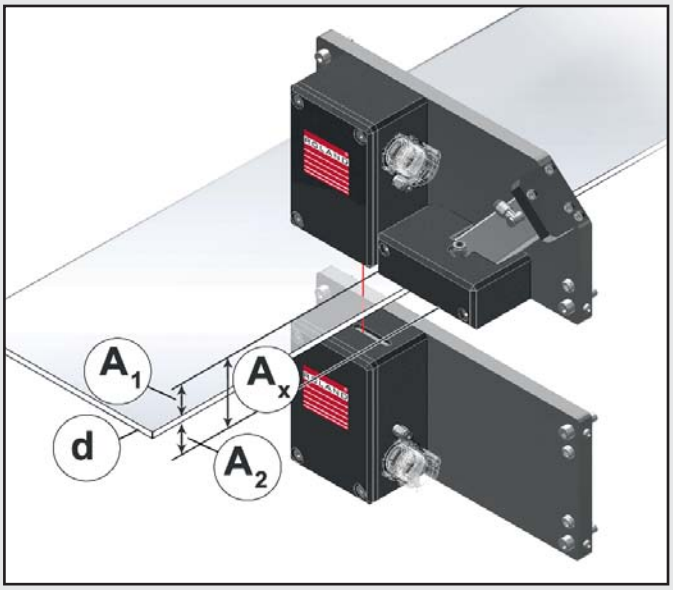

Thickness calculation by the subtraction method.

Mechanical functional dimensions, operation range

For the installation of the measuring system, the knowledge of the mechanical functional dimensions, especially the knowledge of the measuring center points, as well as the system´s matching line is necessary. In contrast to the measuring center, which is a fixed dimensional size, the system´s matching line must be calculated. The operation range is defined as the area (Z-direction) in which the material which must be measured is allowed to move in the working position in order to ensure a plausible measurement data acquisition. The operation range cannot be fully used.

Measuring distance, measuring focus, matching line

The measuring distance is the distance range of the laser to the material (Z-direction) in which a plausible measuring data acquisition is possible. The goal must be that the material to be measured is guided past the lasers with a constant distance.The distance should ideally be laser - or material identical, see the illustration next. The measuring focus is defined as the point or the dimension in which both laser beams are meeting, in the Z-direction at their optimal measuring distance. The bottom edge of the system always serves as a reference.

Basics

The matching line results from the reference edge of the system (Z-direction) to the measuring center point minus half the material thickness.
As a measure of the material thickness, the most commonly measured nominal thickness is used.

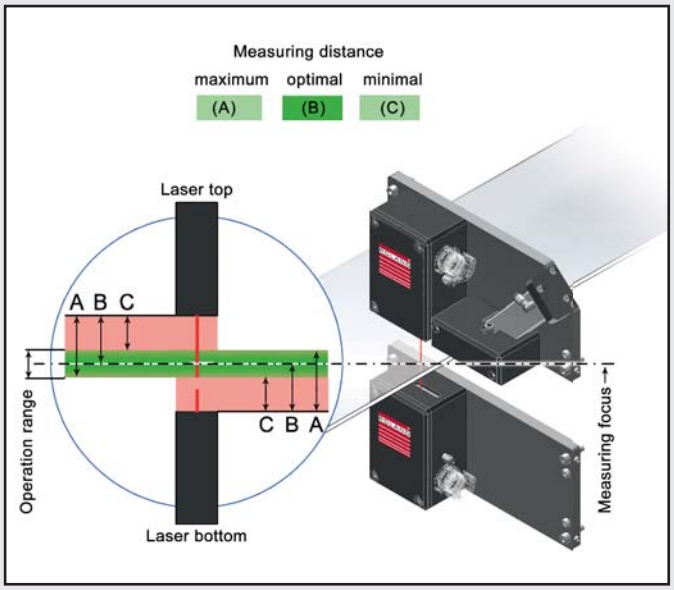

Operation range and measuring distance

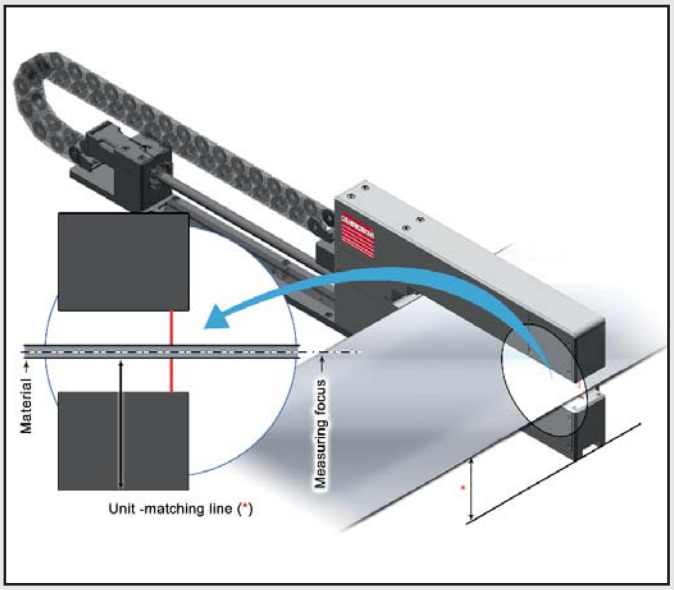

Measuring focus and matching line

■ Structure of ROLAND Thickness Gauging Systems

During the development of the Roland Thickness Gauging Systems all necessary requirements in the field of mechanics and electrics were taken into account, which will result from modern production processes and the measuring technology to be integrated over the next few years.

■ Mechanic design

In the mechanical design, a special emphasis was placed on a rigid, vibration and´temperature resistant construction. Mechanical interfaces allow easy mounting and integration into the customer system.

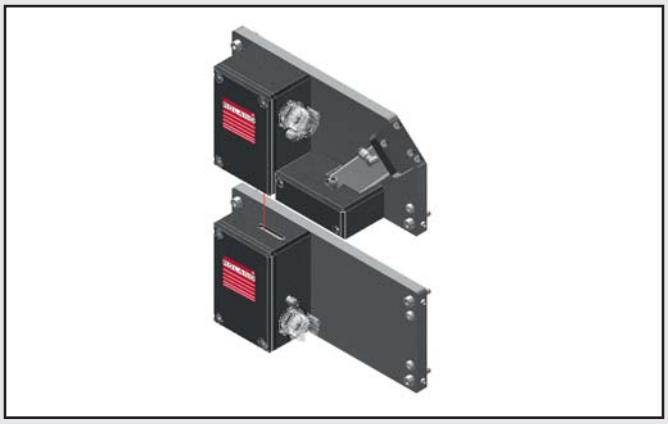

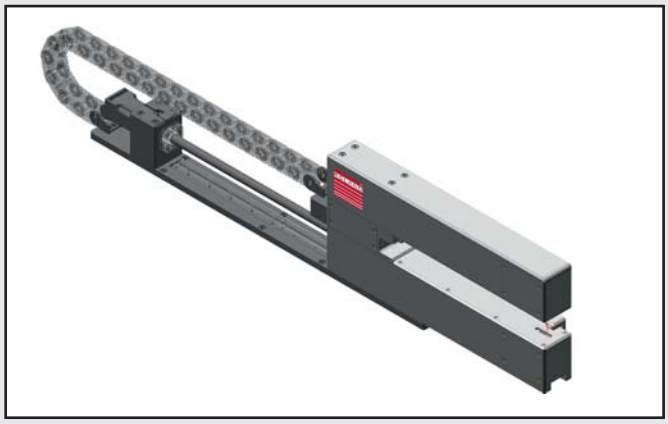

Rigid, vibration free and temperature resistant design

Basics

Material transfer system

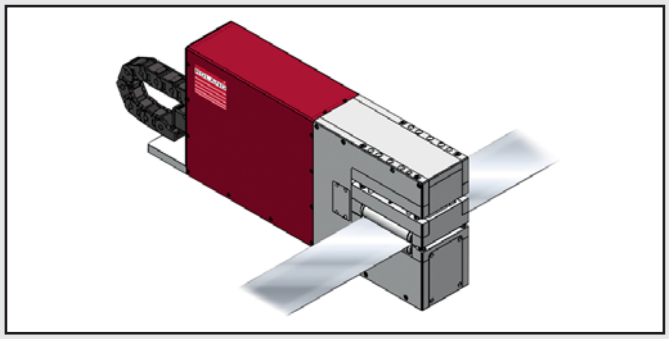

The dynamic systems LTM-SMART and LTM-MAXI are structurally designed for an upgrade with a material transfer system.

This permits, if not feasible from the customers system, the necessary smooth transport of the materials, as well as the proper material guiding.

Thickness Gauging System LTM-SMART with a material transfering system

Control concept of LTM-ECO

The control concept for the thickness gauging system LTM-ECO is based on an embedded solution. This allows a small compact design, making integration into a customer-side system very easy.
All necessary components for controlling and regulating the measuring task for the LTM-ECO are integrated in the HMI device. Operation is performed via four integrated buttons, the display of information via a dot matrix display (4x20).
To synchronize the determined thickness measurements with the associated material path or associated location on the material (X coordinate), the encoder supplied with the system must be integrated by the customer into the customer-specific system. Communication with the higher level control system is via a defined interface (Profibus, Profinet). All connections are pluggable.

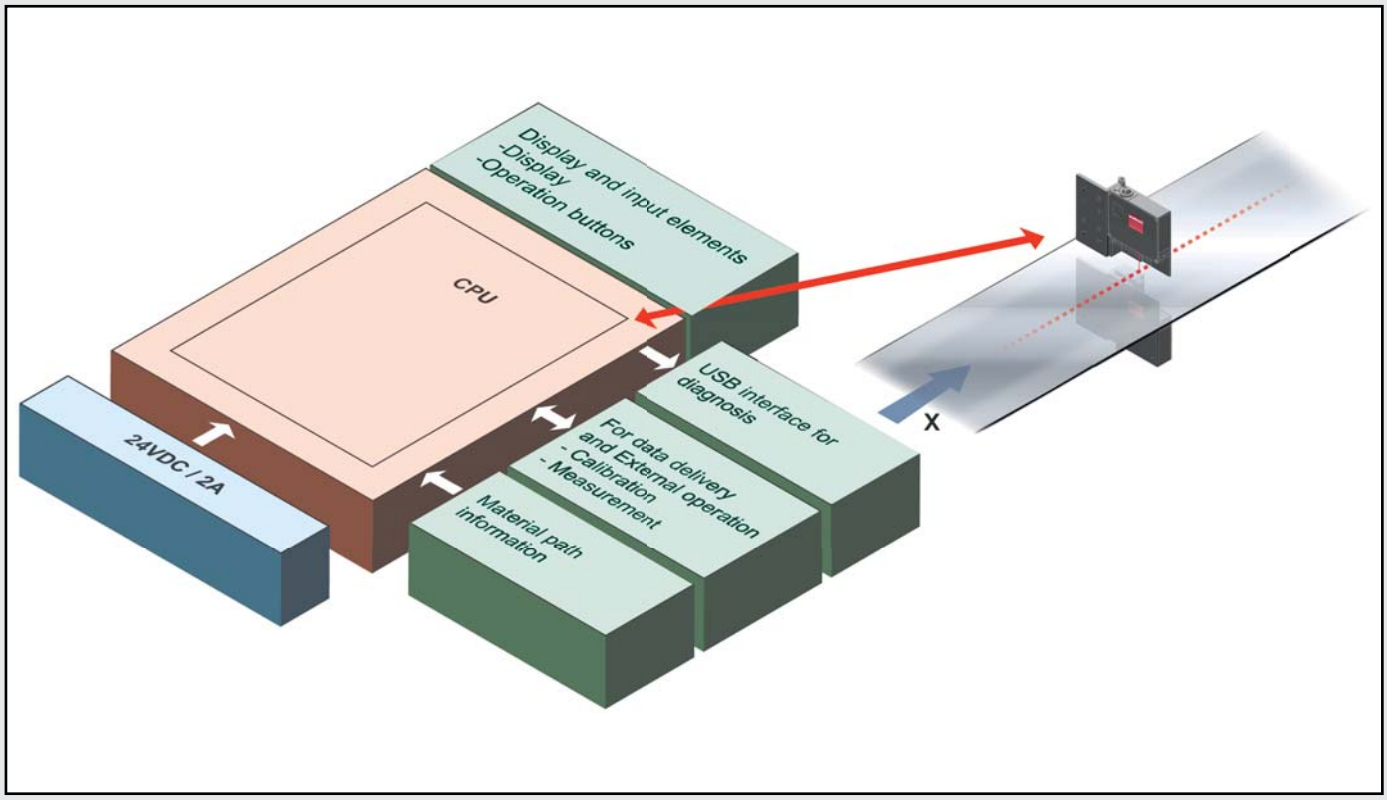

The LTM-ECO control concept

Basics

■ Control concept for LTM-BASE, LTM-SMART, LTM-MAXI

The basic control principle for LTM-BASE, LTM-SMART and LTM-MAXI systems is based on a server-client solution. Internally, on the CPU (Beckhoff), the necessary server and the included internal client are installed.

An optional 21.5“ touch monitor is used to operate the measuring system. A customer mouse and keyboard can optionally be connected via USB.

Additional clients can be connected to the controller via Ethernet if required and do enable an almost open operating concept.

To synchronize the determined thickness measurements with the associated X coordinate (material path or associated location on the material), a separate path signal must be provided by the customer or the encoder, which is optionally included in the scope of delivery and must be integrated into the customer-specific system.

Communication with the higher-level control system is performed through a defined interface (Profibus, Profinet). Optionally, there is the possibility save the determined thickness measurements values additionally to the customer´s network, e.g. as CSV format.

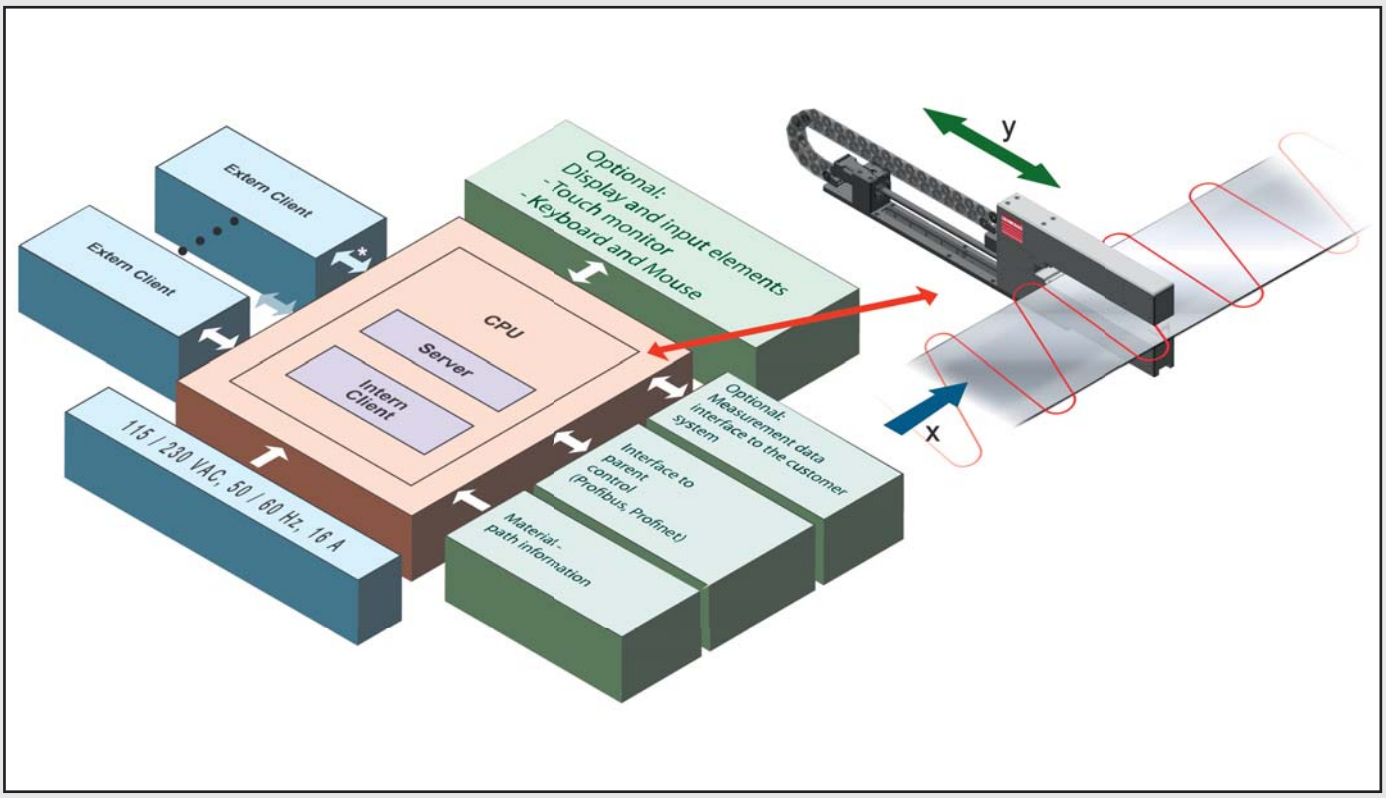

The control concept for LTM-BASE, LTM-SMART, LTM-MAXI

Basics

Thickness Gauging Software LTM-S

The Thickness Gauging software LTM-S (internal client) is included in the scope of delivery of the Thickness Gauging Systems LTM-BASE, LTM-SMART and LTM-MAXI. LTM-S (internal client) and includes all necessary tools for the operation, processing, presentation and provision of the recorded thickness measurement values.

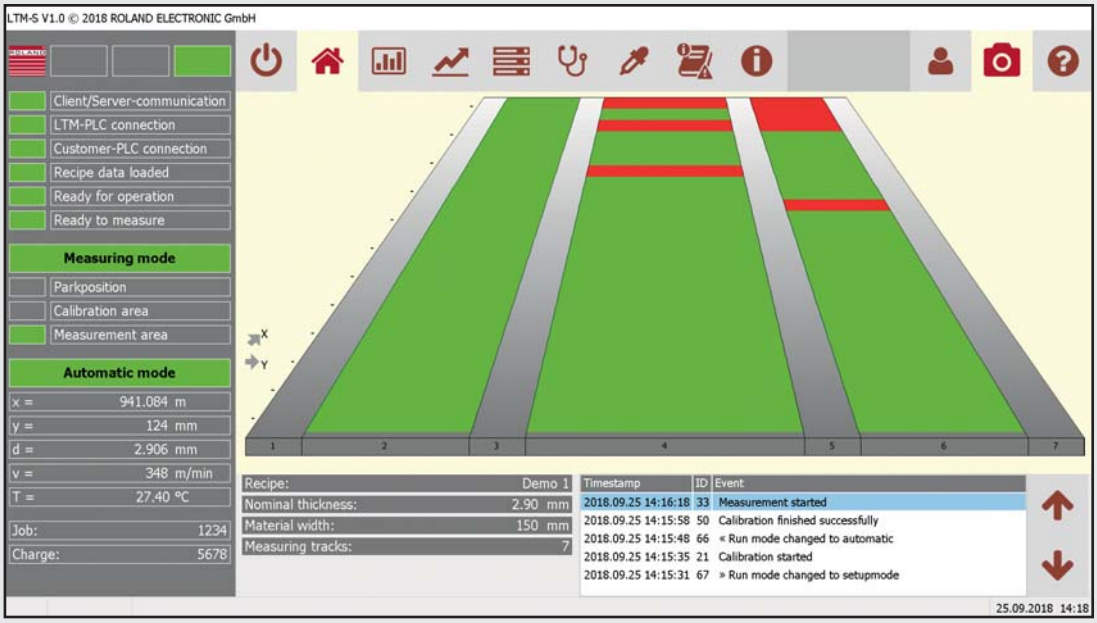

Start screen of the Thickness Gauging Software LTM-S

In addition to the simple, intuitive operation, the clear presentation of the thickness measurement values enable customers to optimally assess the dimensional thickness of the material as a function of the path.

Display of the tool „Thickness -Trend course in X-direction“

Basics

Display of the tool „Thickness-Trend course in Y-direction/cross section“

Special attention was paid to the needs of maintenance during development.
An extensive diagnostic tool allows the simplest diagnosis of the system without prior knowledge.
All measurement analysis is very easy to read and intuitive.

Display of the tool „Measuring values – numerical“

Basics

Measuring accuracy

The resolution of a thickness measuring system provides information about the accuracy with which the desired metrological detection is carried out or realized and how the specified tolerances can be reliably monitored.

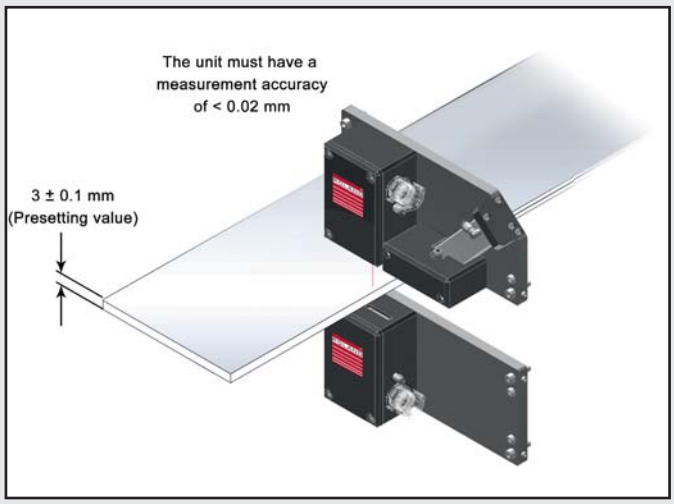

Example for the „golden rule of metrology“

In many areas of industry, the rule is still „The Golden Rule of Measurement“, which is used as a criterion for preselection of measuring means is used and which states that the maximum permissible error limit (measuring accuracy) of the measuring system may only be 10% of the tolerance to be tested.

Even though the correctness of this rule is often discussed today, it still has its justification and can also be used to pre-select the appropriate Thickness Gauging System.

Example calculation using the „golden rule of metrology“
For a sheet metal, the compliance with a material thickness of 3 ± 0.1 mm shall be monitored. According to the dimension, the tolerance is 0.2 mm. When applying the golden rule of metrology (rule of thumb), the thickness gauge must accordingly have a measurement deviation of less than 0.02 mm to ensure compliance with the specified tolerance monitor.

The measuring accuracy of a thickness measuring device is determined by a sum of influencing variables with different weighting, whose control has received a great deal of attention especially during the development of the ROLAND Thickness Gauging Systems.

These factors are:

- The bending and vibration stiffness of the mechanical construction and its elements with high resistance to temperature variations.
- The selected laser sensors in terms of linearity, repeatability, sampling rate, etc.
- The electric and mechanic hardware matching to the sensors.
- The Thickness Gauging Software with the corresponding measuring and electrical filter elements, mathematical-statistical functions etc.

The illustration on the next page is intended to attempt to explain the concept of accuracy, taking into account the previous definitions. In the process, the consideration and correct use of metrological definitions, determinations, etc. are omitted for the sake of simplicity.
Furthermore, the linearity error is assumed to be constant and the representation of the time sequence of the measured thickness values has been waived. Repeatability and resolution are determined by the correct choice of the laser sensors.

Basics

On the other hand, the measurement deviation is defined by the mechanical system (loading deformation, manufacturing tolerances, etc.).

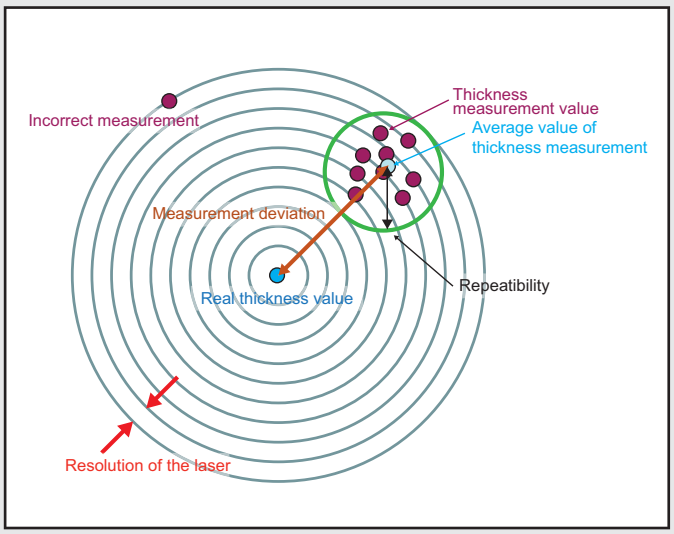

Schematic representation of „accuracy“

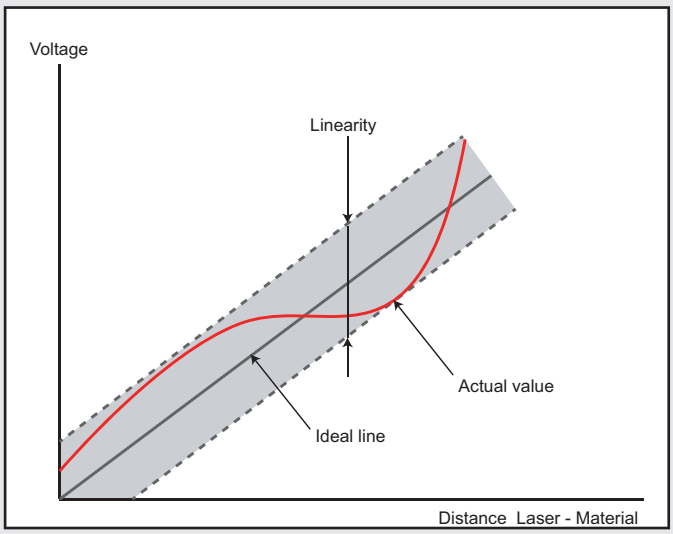

Schematic diagram of „linearity“

Any incorrect measurements that may occur are ecluded by the Thickness Gauging Software LTM-S with its integrated statistical methods and measuring filters. The linearity error is assumed to be constant in the second illustration below. However, this assumption implies that the material to be measured moves at a constant, fixed distance within the operational range of the laser.

When the distance fluctuates, the corresponding linearity error will also change.
Accordingly, when measuring thickness with laser technology, special care must be taken that the material to be measured is optimally guided at the measuring center point of the system and at a constant distance. (Vibration free material transport)

■ Calibration system

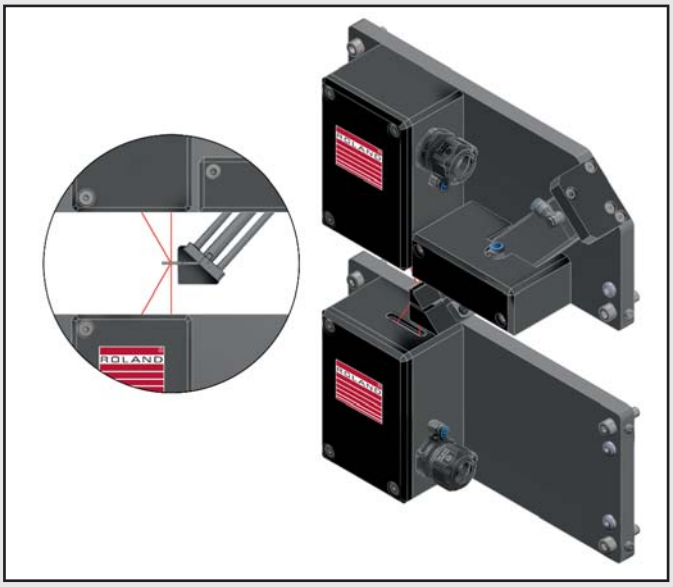

LTM-BASE during full automated calibration

The regularly performed calibration of the system can have a great influence on the measurement result. A calibration unit is integrated in every ROLAND Thickness Gauging system.

Calibration cycles are implemented in the software and enable the required metrological adjustment of the system.

Additionally the adjustment of the measuring system is performed on a certified test piece (calibration piece) and also includes the zero adjustment of the laser sensors.

All settings required for calibration are possible in the thickness measuring software **LTM-S** and are documented.

Basics

Testing the measuring capability

In order to maintain the quality of measurement, the accuracy respectively correctness of the measurement, during the current production process, the ROLAND Thickness Gauging Systems **LTM-BASE**, **LTM-SMART** and **LTM-MAXI** possess a corresponding software tool for performing the so-called „Measurement system analysis according to method 1“. Thereby, a calibrated standard is integrated in the ROLAND Thickness Gauging System and measured at least 25 or 50 times.

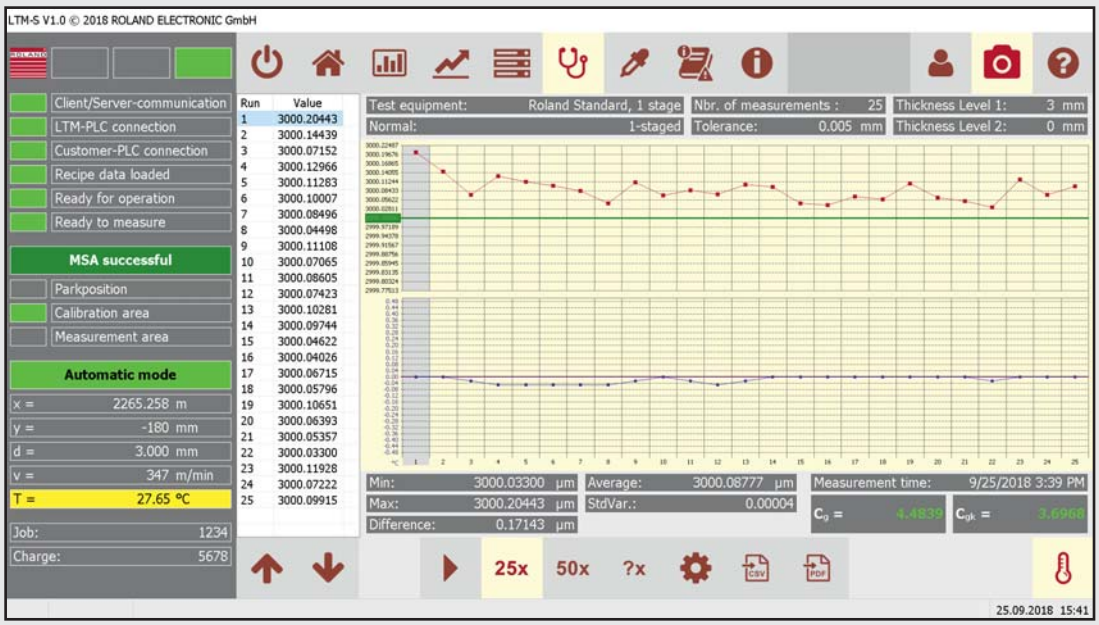

Tool „Measurement system analysis according to method 1“

As required by the ISO norm, the influence of the operator is excluded by the system. The recorded measured values are then according to ISO methods defined and the capability factors C_g and C_{gk} are calculated.
On the basis of these ability characteristics C_g and C_{gk} it can be decided whether the thickness gauging device using a certified standard is suitable for the intended use under the given operating conditions and can be accepted.
The advantage of the ISO methods is that they give a decision support of the equipment measuring capability for the lesser experienced.

Factors and conditions

Surface quality of the material to be measured

The surface quality of the material which has to be measured has a limited influence on the measurement results. Depending on the surface, color, coating and amount of oil, the reflection behavior of the material may vary slightly. Accordingly, the received light intensity in the laser can change.

In the above case the lasers are designed to automatically adjust the light intensity. Furthermore by choosing the calibration standard-piece with a similar surface, this effect is taken into account and compensated for.

Basics

Material speed

Thickness measurement using laser technology can only be performed when a relative movement between the material to be measured and the lasers takes place.

Measuring density

According to the customer‘s application, each LTM Thickness Gauging System is dimensioned accordingly and each measuring laser has a defined sampling rate.

With the aid of the sampling rate [Hz] and the material speed [m/s] of the customer, the measuring density (number of measured values per track) can be calculated.

Material guiding

The material guiding has a decisive influence on the measurement result (see section work area or measuring distance).

Therefore, in the vicinity of the laser sensors a guided vibration free material transport must be guaranteed. The installation location of the measuring systems must be selected in order to fulfill these requirments.

■ Special solutions

In general, all Thickness Gauging Systems of the ROLAND LTM product series can easily be combined with each other. Therefore it is possible to measure distances greater than 1000 mm, or only to measure the edge area e.g. Use our experience. We will also find a solution for your challenge!

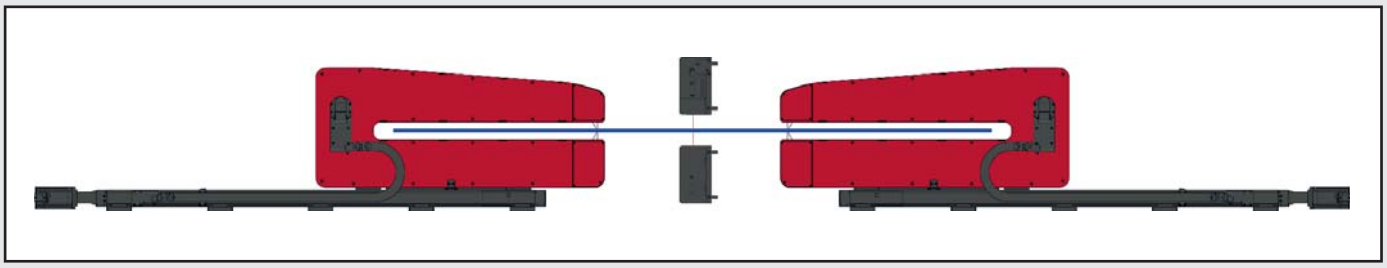

Tandem solution edge measurement with combined central line measurement (2 x LTM-MAXI and 1 x LTM-BASE)

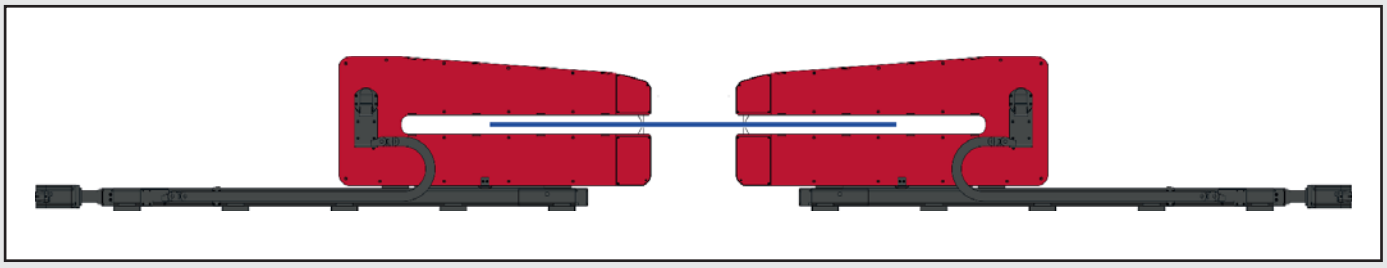

Tandem solution with a bandwidth of 1600 mm (2 x LTM-MAXI)

Basics

ROLAND ELECTRONIC LTM product series

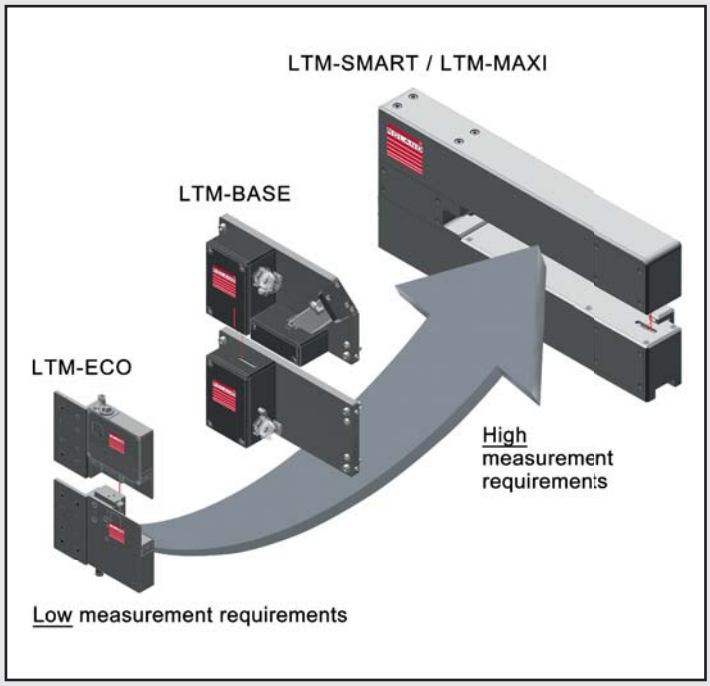

The ROLAND ELECTRONIC LTM product series

ROLAND ELECTRONIC has developed a wide range of Thickness Gauging Systems for a variety of applications or for metrological tasks.

The ROLAND Thickness Gauging Systems differ not only from the possibility of static or dynamic data sampling, but also in the data sampling rate and accuracy by which data is captured and provided for further use.

The operating options and the different operating modes serve as selection criteria to help you to choose the most suitable thickness gauging system from our LTM portfolio.

The best suited system for your application

We help to clarify all important questions during the design phase and will develop the requirements profile for a customized and efficient solution together with you.
In order to choose the best suited system for your application, some questions have to be clarified beforehand, such as:

- Material type, shape and surface finish
- Geometric dimensions such as material width, length, etc.
- Thickness range incl. thickness tolerances which must be measured or monitored, Measurement capability analysis etc.
- Desired operating modes such as line measurement, traversing, etc.
- Kinematic sizes, e.g. transport speed, cycle time, etc.
- Ambient and material temperature
- Mounting conditions and installation site, material guiding and smooth material transport
- Operating concept
- Electrical interface, type of data backup and respectively, cable lengths etc.

We will gladly assist you for the selection of the best suited system according to your needs.

On the website of ROLAND ELECTRONIC, **www.roland-electronic.com**, you will find a suitable questionnaire that can be useful for finding answers to your specific tasks.

Comparing ROLAND Thickness Gauging Systems

The comparison chart below will help you choose the right thickness gauge for your application.
It contains a very rough listing of the respective product features. You will find a detailed description of services in the next chapter „Overview“

Product feature	LTM-ECO	LTM-BASE	LTM-SMART	LTM-MAXI
Measurable thickness	0.2 ... 15mm	0.05 ... 8mm	0.015 ... 8mm [1]	0.05 ... 8mm
Measuring material (Non-transparent)	FE-, NF materials			
Max. measuring deviation calibration normal [2]: (Accuracy of the system)	15µm	5µm	0.5µm [3] respectively 1.5µm [4]	3µm
Static measuring principle	✓	✓	✓	✓
Dynamic measuring principle	✗	✗	✓	✓
With C - frame	✗	✗	✓	✓
With traversing unit perpendicular to material transport	✗	✗	✓	✓
Number of maximum possible measuring stations:	3	5	1	1
Measuring mode Line measurement	✓	✓	✓	✓
Measuring mode Micro-Traversing	✗	✗	✓	✓
Measuring mode Macro-Traversing	✗	✗	✓	✓
Mode Macro-Traversing with track measurement	✗	✗	✓	✓
Operation	4 keys + dot-matrix-display (4x20).	Via client software with 21.5“ touch display		
Measuring system analysis method 1 integrated	✗	✓	✓	✓
Electric interface	Profibus or Profinet			

[1] Depending on the selected LTM-SMART type
[2] The specified measurement deviation applies to an angle deviation ≤ 1 ° and the specified variation of the pass line
[3] Valid for the systems LTM-SMART150-06, LTM-SMART 300-06, LTM-SMART 450-06
[4] Valid for the systems LTM-SMART 300-20, LTM-SMART 450-20

Comparing ROLAND Thickness Gauging Systems

Overview

ROLAND ELECTRONIC – LTM product series ● The right system for your application ● LTM-ECO ● LTM-BASE ● LTM-SMART ● LTM MAXI ● We will gladly support and provide local service ● Unit configuration ● Electric interface ● Process parameters ● Metrological characteristics ● Laser characteristics ● Connections ● Consumptions ● Ambient conditions

Type	LTM-ECO	LTM-BASE	LTM-SMART	LTM-MAXI
			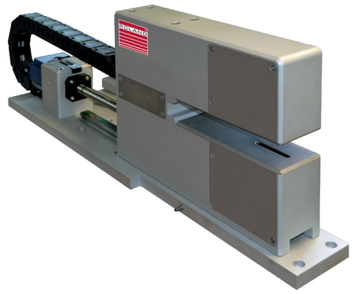	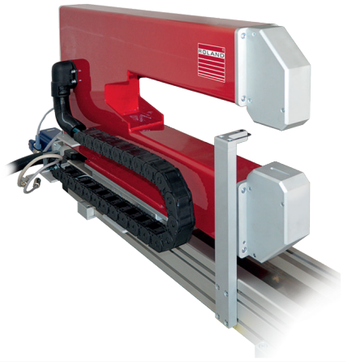
System configuration				
Type of measurement:	static		static and dynamic	
Measurement mode:	Line measurement		Line measuring / Micro-taversing / Macro-traversing / Macro-traversing with track measuring	
Number of measuring stations [1]:	1 to max. 3	1 to max. 5	1	
Operation:	Compact enclosure with four integrated keys Display information via Dot Matrix Display (4x20)	Via client software e.g. internal client Roland LTM-S via 21.5“ touch display		
Electric interface	Profibus respectively Profinet			
Data interface:	Profibus respectively Profinet	Ethernet		
Data type:	Minimal, maximal and determined average thickness per current measurement interval	Measurement protocol on measurement history with minimum, maximum and determined average thickness as CSV format		
Integrated measuring system analysis	Not present	Yes, integrated via ROLAND Thickness Gauging Software LTM-S		
Calibration of the system	Pneumatic-mechanic		Electromecanic	
	Control via external customer PLC	Control integrated via ROLAND Thickness Gauging Software LTM-S		
Track unit transversal to the material transport direction	Not present		Present, axis with step motor	
Max. measuring distance [2]:	---		150mm / 300mm / 450mm	300mm / 450mm / 600mm / 800mm / 1000mm
Positioning accuracy	---		± 1mm	
Positioning velocity	---		12m/min	
Measurement speed	---		6m/min	
Process parameters				
Measuring material:	Fe-, NF materials, non-transparent			
Material velocity [3]:	max. 1.800m/min			
Material temperature [4]:	max. 100°C (212°F)			
Permissible residual moisture on the strip surface	500mg/ m² per side, evenly distributed		200mg/m² per side [5], evenly distributed 500mg/m² per side [6], evenly distributed	500mg/m² per side, evenly distributed

[1] A measuring station consists of 2 laser sensors
[2] The measuring path depends on the selected system and at the same time it describes the max. possible material width that can be measured.
[3] The distance of the measuring points increases with increasing speed, depending on the selected sampling interval.
[4] Other material temperatures upon request

[5] Valid for: LTM-SMART150-06, LTM-SMART 300-06, LTM-SMART 450-06
[6] Valid for: LTM-SMART 300-20, LTM-SMART 450-20
The specified repeatability respectively the deviation of measurement applies to an angular deviation of ≤ 1° and variation of the passing line.

Overview

ROLAND ELECTRONIC – LTM product series ● The right system for your application ● LTM-ECO ● LTM-BASE ● LTM-SMART ● LTM MAXI ● We will gladly support and provide local service ● Unit configuration ● Electric interface ● Process parameters ● Metrological characteristics ● Laser characteristics ● Connections ● Consumptions ● Ambient conditions

Type	LTM-ECO 	LTM-BASE 	LTM-SMART 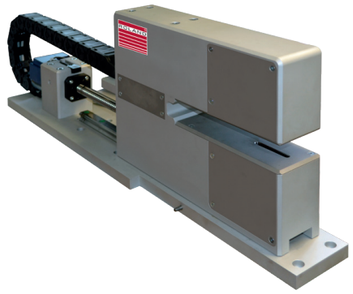	LTM-MAXI 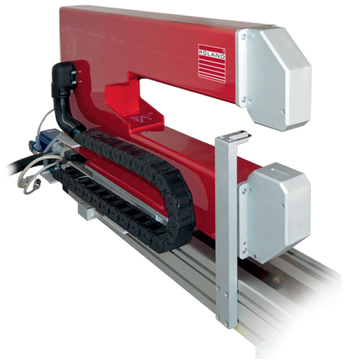
Metrological characteristics				
Measurable material thickness:	0.2mm ... 15mm	0.05mm ... 8mm	0.015mm ... 2.0mm [5] / 0.05mm ... 8mm [6]	0.05mm ... 8mm
Max. deviation of measurement at calibration normal [7]:	15µm	5µm	0.5µm [5] / 1.5µm [6]	3µm
Work space:	40mm (± 20mm around measuring focus)	20mm (± 10mm around measuring focus)	6mm (± 3mm around measuring focus) [5] 20mm (± 10mm around measuring focus) [6]	20mm (± 10mm around measuring focus)
Resolution:	1µm	0.1µm		
Repeatibility [7]:	± 6.0 µm	± 1.0µm	± 0.5µm [5] / ± 1.0µm [6]	± 1.0µm
The specified repeat accuracy respectively measurement deviation applies to an angle deviation ≤ 1° and variation of the pass line	± 3 mm		± 1mm / ± 3mm	± 3mm
Sampling interval:	500 µs	20 / 50 / 100 / 200 / 500 / 1000 µs		
Laser characteristics				
Linearity:	± 40µm	± 4.0µm	± 1.2µm [5] / ± 4.0µm [6]	± 4.0µm
Light spot dimensions:	0.26mm x 1.2mm	0.05mm x 2.0mm		
Measuring principle:	Laser triangulation			
Laser type, wave length:	Semi conductor, red, 658nm	Semi conductor, red, 650nm		
Laser class:	2 (DIN / IEC), max. 1mW	2 (DIN / IEC), max. 0.95mW		
Connections, consumption, ambient conditions				
Electric connection:	24VDC/ 1A	115V/230VAC, 50/60 Hz, 16A		
Protection class:	Operating unit IP 65 / sensors IP 54	Switch cabinet IP 65 / sensors IP 67		
Ambient temperatures:	Measuring stations [8]: 5 – 45°C (41-113°F) / Control unit: 5 – 45°C (41-113°F) / relative air humidity:10 – 95%			
Air supply:	Pressure: min. 6 bar; max. 8 bar / ammount approx. 15m³/h			
Compressed air quality [9]:	Solid particles: quality class 5 = max. 40µm / particle density < 10mg/m³ / water content: quality class 5 = 9.4g/m³ at 10 °C / oil content: quality class 4 < 5mg/m³			
Mechanic connection of compressed air	Hose 6 / 4 mm			

[2] The measuring path depends on the selected system and at the same time it describes the max. possible material width that can be measured.
[3] The distance of the measuring points increases with increasing speed, depending on the selected sampling interval.
[5] Valid for: LTM-SMART150-06, LTM-SMART 300-06, LTM-SMART 450-06
[6] Valid for: LTM-SMART 300-20, LTM-SMART 450-20

[6], [7] The specified repeatability respectively the deviation of measurement applies to an angular deviation of ≤ 1° and variation of the passing line.
[8] Only if the prescribed calibration protocol is followed
[9] DIN ISO 8573-1, before the maintenance unit (scope of delivery)

LTM-ECO

■ LTM-ECO

LTM-ECO with one measuring station

The ROLAND ELECTRONIC Thickness Gauging System **LTM-ECO** is a compact device for the determination of thickness values during continuous operation e.g. at conveyor systems.

By its design a simple integration within a wide variety of production lines without much effort is possible.

During the development of LTM-ECO, great attention was paid to most intuitive operation, simplest interface, maintenance freedom and self-monitoring.

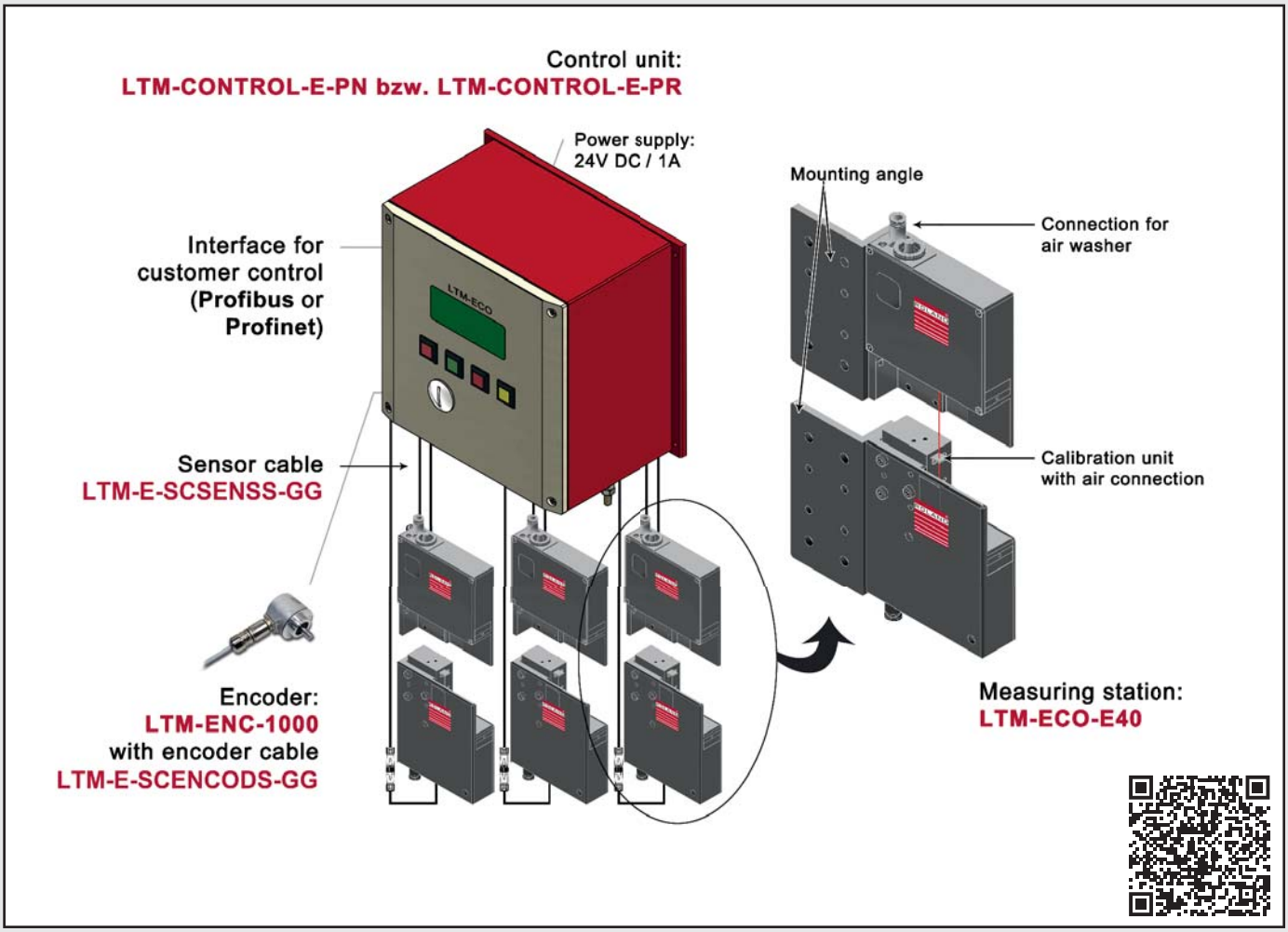

Components of the Thickness Gauging System LTM-ECO

LTM-ECO

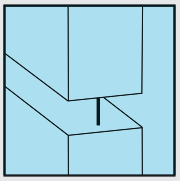

The **LTM-CONTROL-E-PN** (Profinet interface) or **LTM-CONTROL-E-PR** (Profibus interface) control unit can be used to connect up to three **LTM-ECO-E40** measuring stations (With 2 laser sensors each).

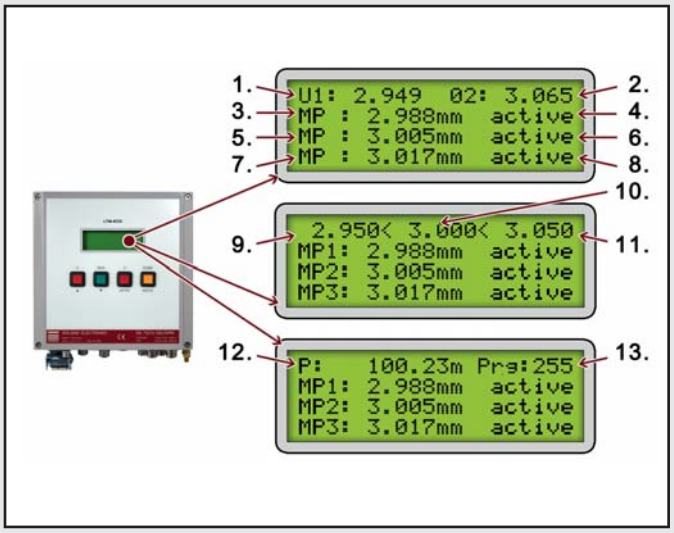

LTM-CONTROL-E , display information

All necessary settings or changes etc. are performed by pressing the keys on the control unit or via the customer‘s interface.
The measurement results, program and status information, etc. are displayed simply and easily in the dot matrix display / 4x20) or via customer interface on a seperate screen. Profibus (Slave) or Profinet (IO) is available as interface for the customer.
Among current thickness values, all further relevant information is available via these interfaces. The control unit can be parameterized and controlled (remote control) via above mentioned interfaces. The necessary path signal (material progress) is generated via the encoder, which is supplied with the system. Integration into customers plant is required.

	Denomination		Explication		Deployment at
1.	Maximum	Thickness measured value with associated measuring station (MS1, MS2, or. MS3)	Maximum	Thickness values across all connected measuring stations between measuring start and measuring stop signal. The numerical value indicates at which measuring station this value has occurred.	display
2.	Minimum		Minimum		
3.	Actual thickness value at measuring station 1		Actual measured thickness value		display + Profibus / Profinet interface output[1)]
4.	Status of measuring station 1		Status of measuring station 1 according program specification		display + Profibus / Profinet interface input + output
5.	Actual thickness value at measuring station 2		Actual measured thickness value		
6.	Status of measuring station 2		Status of measuring station 2 according program specification		
7.	Actual thickness value at measuring station 3		Actual measured thickness value		
8.	Status of measuring station 3		Status of measuring station 3 according program specification		
9.	Minimum permissible undersize		Permissible undersize up to which the material to be measured is considered to be still ok.		
10.	Specified nominal size		Nominal size of the material to be measured		
11.	Maximum permissible oversize		Permissible oversize up to which the material to be measured is considered to be still ok.		
12.	Actual path information		Actual path information (Information is supplied by the encoder)		display + Profibus / Profinet interface output[2)]
13.	Actual program number		The actual program number is displayed. It is posibble to save up to 255 different programs.		display + Profibus / Profinet interface input + output
	[1)] For all provided thickness values a path information is always allocated and provided. [2)] For each provided path information the corresponding thickness values are provided, depending on the status of the measuring station.				

Denomination of signals for LTM-ECO

LTM-ECO

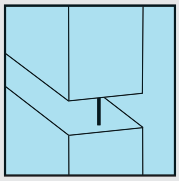

■ Dimensions

Dimension sheet measuring station LTM-ECO-E40

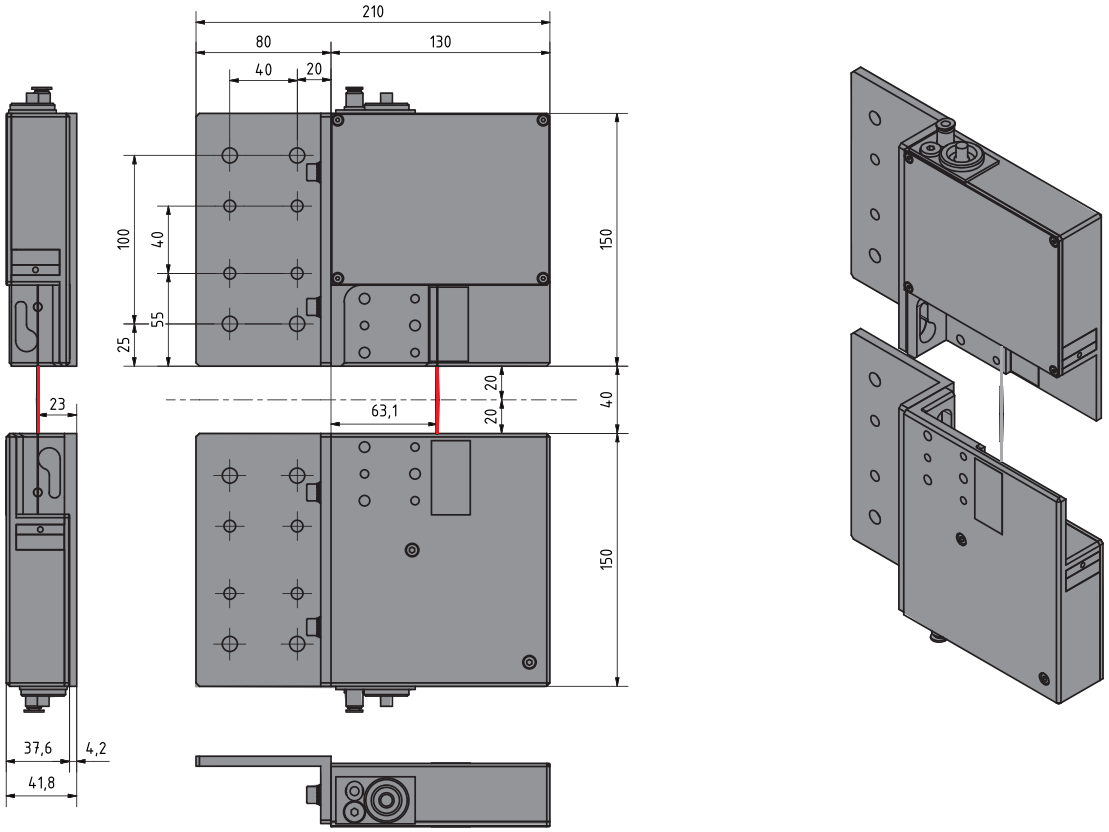

Dimension sheet control unit LTM-CONTROL-E-PN respectively LTM-CONTROL-E-PR

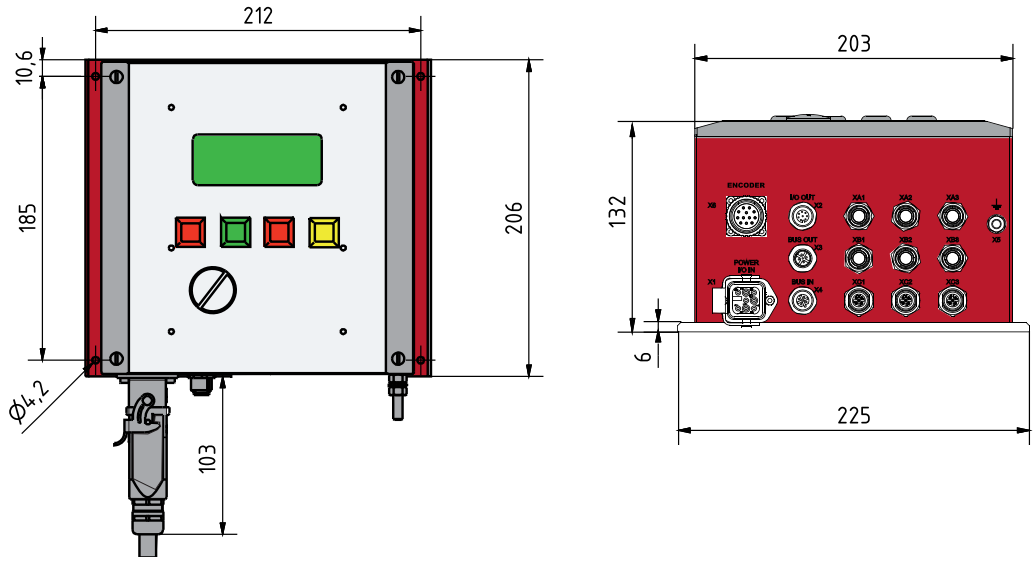

Dimension sheets of LTM-ECO (All information in mm)

LTM-ECO

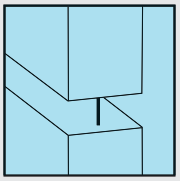

■ Order information

Designation	Part name	Description
Control unit	**LTM-CONTROL-E-PN**[1)]	Compact and robust aluminum enclosure with four-line display and operating keys all necessary electric connections included, pluggable version.
	LTM-CONTROL-E-PR[2)]	
Measuring station	**LTM-ECO-E40**	Up to three measuring stations can be connected to a control unit. Each measuring station consists of a pair of laser sensors, incl. mounting unit and a calibration unit with parallel end gauge of 1.000 mm, class 1.The control of the calibration unit is performed by the customer (pneumatically switched).
Connection cables	**LTM-E-SCSENSS-GG**	Connection cable for measuring stations (2 pcs. required for each station). Both cable ends are pluggable, with straight cable connector on unit side, straight cable socket on sensor side. Standard cable length 2m[3)]
	LTM-E-SCENCODS-GG	Connection cable for encoder to ROLAND unit, with straight M23 cable connector and straight M23 cable socket. Standard length 5m[3)].
Encoder	**LTM-ENC-1000**	Mounting at the customer-side system to generate the necessary path signals. Clamping flange 58mm and shaft diameter of 10mm.

[1)] For all provided thickness values a path information is always allocated and provided.
[2)] For each provided path information the corresponding thickness values are provided, depending on the status of the measuring station.
[3)] Other lengths upon request.

Order information for LTM-ECO

LTM-BASE

■ LTM-BASE

LTM-BASE measuring station

LTM-TOUCH

The ROLAND **LTM-BASE** Thickness Gauging System is an easy-to-integrate system for determining thickness measured values during continuous operation. It was specially developed for high speed strip material, especially in press shops or band-coil processing systems.

The system is designed so that up to 5 measuring points can be statically operated, evaluated, displayed and stored either optionally or simultaneously. The measurement is carried out without contact.
Thanks to the assembly aids belonging to the scope of delivery, a simple and quick installation of the measuring points in the customer-side system is guaranteed.

The connection to the customer‘s control concept is done either via Profibus or Profinet.
On a separate data interface, all relevant measurement data is provided e.g. in CSV data format.
The calibration unit integrated at each measuring point including the associated measuring standard and the temperature sensors allow the fully automatic adjustment of the system and thus the appropriate adaptation to changing environmental conditions.

The tool for measuring the measurement capability implemented within the **LTM-S** operating software ensures that the Thickness Gauging system is constantly monitored for compliance with the framework requirement conditions. The ROLAND operating software (internal client) LTM-S enables a simple, self - explanatory and reliable operation of the measuring system. Graphical evaluation tools allow the user to quickly visualize the corresponding measurement results.

The LTM-BASE thickness measuring system consists of:
- Optional 1 to max. 5 measuring points. In each case one measuring point has an upper measuring head pneumatically extendable calibration mechanism and a lower measuring head, each with a purge air connection. Each sensor contains a laser triangulation sensor in a sturdy protective housing.
  An in-situ calibration per measuring point is planned.
- A Rittal control cabinet with ventilation and evaluation electronics.
- ROLAND operating software LTM-S.
- All necessary hose and cable units for supplying the measuring system.
- Optional an encoder for providing the material path information.

LTM-BASE

Components

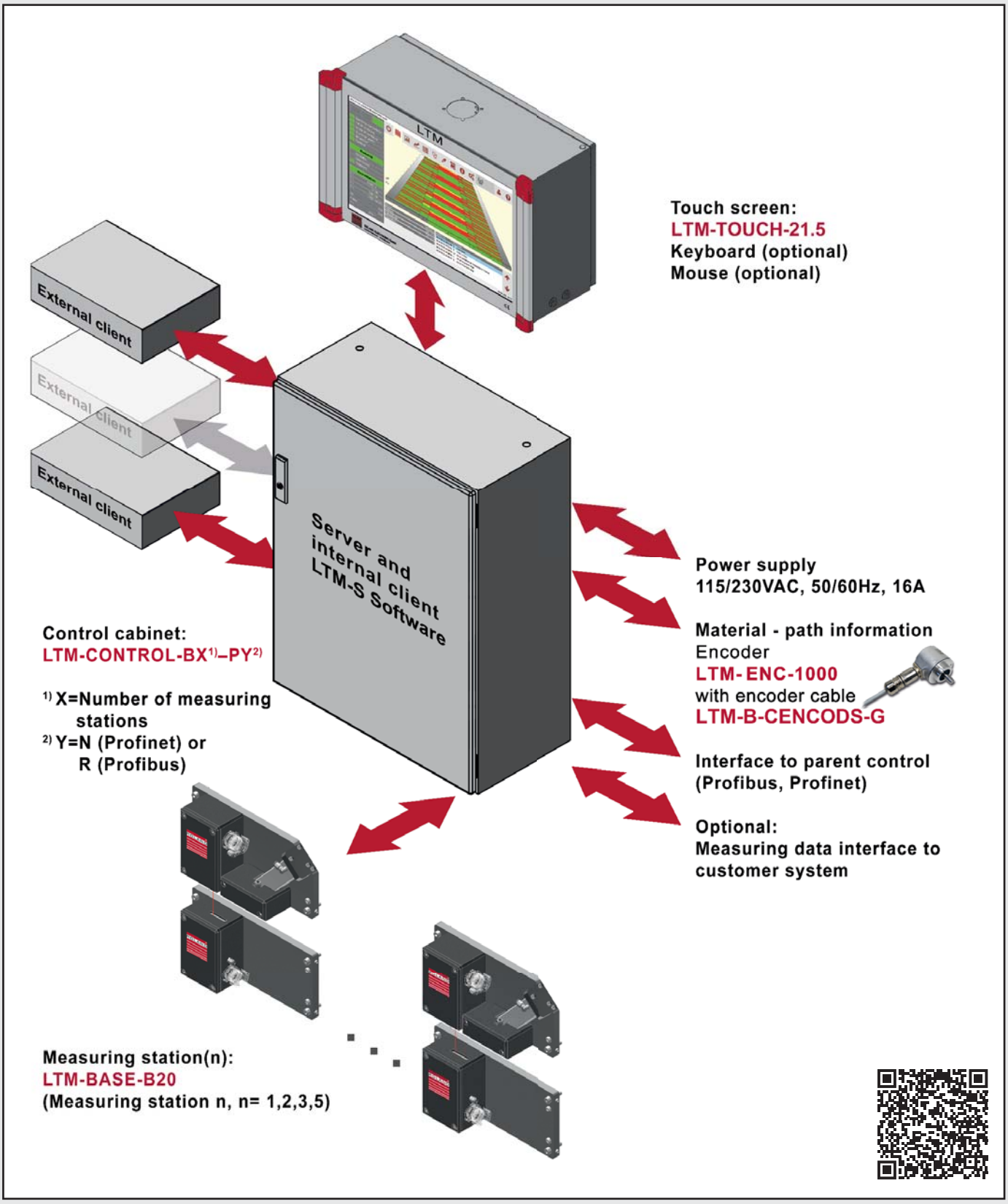

Components of the Thickness Gauging System LTM-BASE

LTM-BASE

Dimensions

Dimension sheet of measuring station LTM-BASE

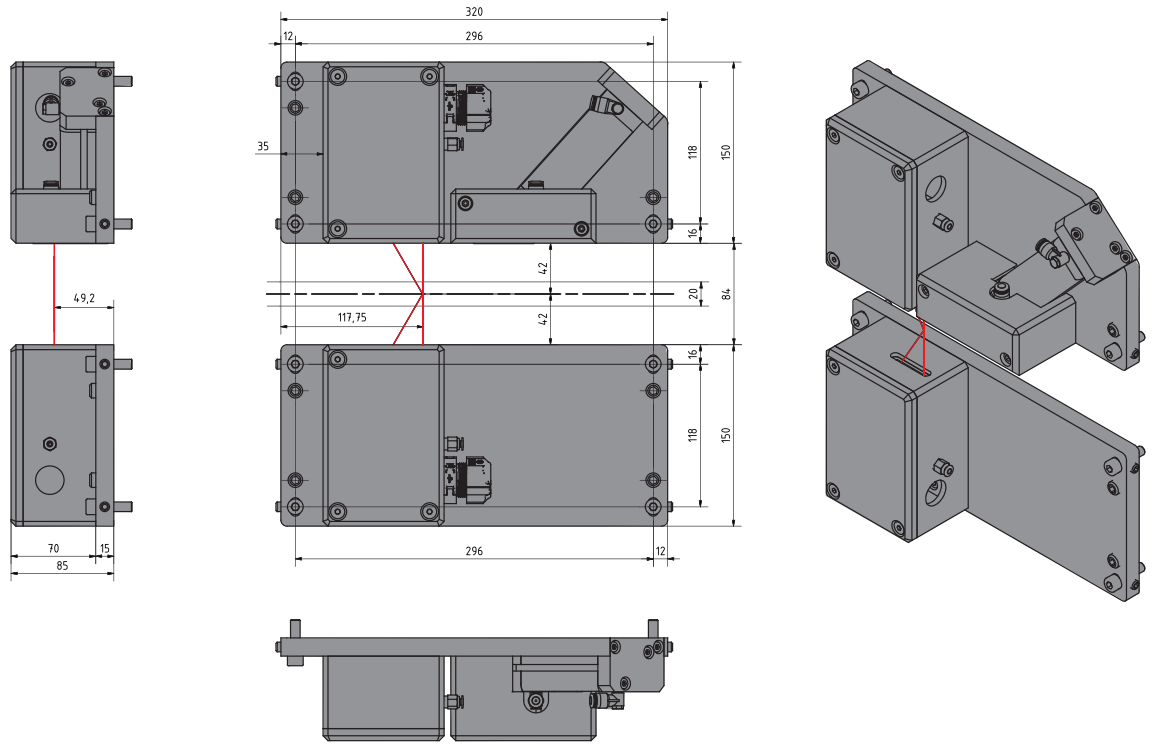

* Dimension sheet of LTM-TOUCH (left) and Control cabinet (right)

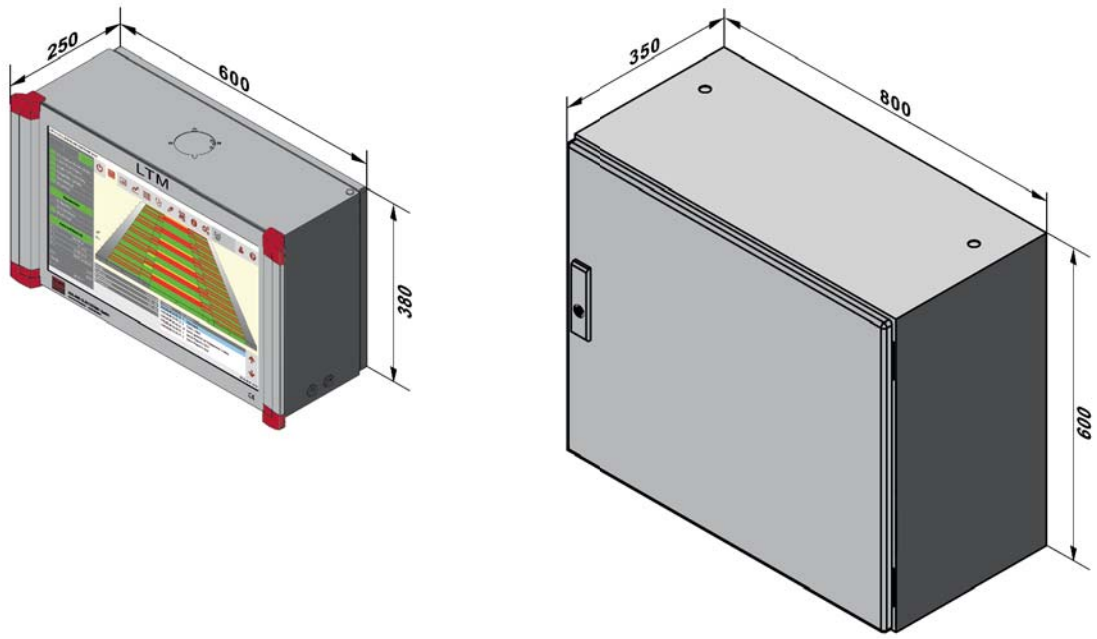

*Dimensions of LTM-BASE (All information in mm). * Also for LTM-SMART und LTM-MAXI*

LTM-BASE

Order information

Designation	Part name	Description
Control cabinet with server and internal client and the necessary pneumatic units	**LTM-CONTROL-BX[1]-PY[2]**	Rittal compact control cabinet 800mm x 600mm x 350mm with all necessary electrical hardware components to realize the measurement task. • Beckhoff Industrial PC CX5140 with operating system and I/O module mounted on TwinCat, Profinet or Profibus interface, license clamp etc. • Measurement controller / Laser control unit for X[1] measuring stations. • Integrated interface for control from the customer‘s side Y[2]), Profibus or Profinet. • Server and client software LTM-S with recipe database, measurement mode selection, profile and trend display, user administration, etc. • With all the necessary electrical connections for the C-Frames, reference and limit switches etc. on the terminal strip. • Separate accessories, such as pressure switch for air purging.
Measuring station	**LTM-BASE-B20**	1,2,3 or 5 measuring stations can be connected. A measuring station consists of: • 2 Sensor enclosures with purging air connection, equipped with high-precision distance sensors with a measuring range of 20mm (± 10mm) connected to the control cabinet LTM-Control-BX[1]–PY[2] • Alignment aid for mounting the measuring station in the customer system. • 1 unit with bracket and calibration standard 2mm and pneumatic cylinder with magnetic limit switch for position monitoring of the pneumatic cylinder.
Connection cables	**LTM-B-SCSENSS-GG**	Connection cable for the measuring stations (sensor) LTM-BASE-B20. • 2 pcs. necessary for each measuring station. • One end with circular connector for connection to the sensor, the other end with rectangular connector for connection to the measuring controller • Standard length 10m[3]
	LTM-B-CABLE-SET	Connection cable for the measuring stations (magnetic limit switch calibration cylinder) LTM- BASE-B20. • 2 pcs. are necessary for each measuring station. • One end with M8 connector for connection to the switch, the other end prepared for terminal connection. • Standard length 10m[3]
	LTM-B-CENCODS-G (Option)	Connection cable for encoder to the ROLAND system, with straight M23 cable socket equipped for connection to the encoder and prepared at the other end for terminal connection in the control cabinet.
Hose sets	**LTM-B-TUBE-SET**	Hose set for the first measuring station LTM- BASE-B20 (Only necessary for the first track) • 2x10m[3] Hose 6mm for direct connection to magnetic valve and cylinder • 2x10m[3] Hose 4mm for connecting the purging air with a Y-distributor 4mm - 4mm - 4mm and a T-distributor 6mm - 4mm - 6mm • For each additional extension track order separately: LTM-B-TUBE-SET-EXT
	LTM-B-TUBE-SET-EXT	Extension hose set for each additional measuring station LTM- BASE-B20 (Not necessary for the first measuring station) • 2x2m[3] Hose 6mm for Festo cylinder Type ADNGF • 2x2m[3] Hose 4mm for connecting the purging air. • 2 pcs. Y-distributors 4mm - 4mm - 4mm and 2 pcs. Y-distributors 6mm - 6mm - 6mm
Option control unit	**LTM-TOUCH-21.5**	21.5“ touch monitor for displaying and operating the internal client LTM-S • Rittal compact control cabinet 600mm x 380mm x 200mm with all necessary electrical hardware components, incl. 2 x USB port 3.0. • 21.5“ touch monitor, mounted in the control cabinet. • With cable set 5m[3] for connection to the corresponding control cabinet LTM-Control-BX[1]–PY[2]
Option Encoder	**LTM-ENC-1000**	Installation in the customer‘s system to generate the necessary travel signals with clamping flange 58mm and a shaft diameter of 10mm. Optionally, if no route information can be provided by the customer.

[1] Maximum connectable measuring stations X=1,2,3 or 5
[2] Interface for customer control: Y = N - Profinet, Y = R - Profibus
[3] Other lengths upon request.

Order information for LTM-BASE

LTM-SMART

■ LTM-SMART

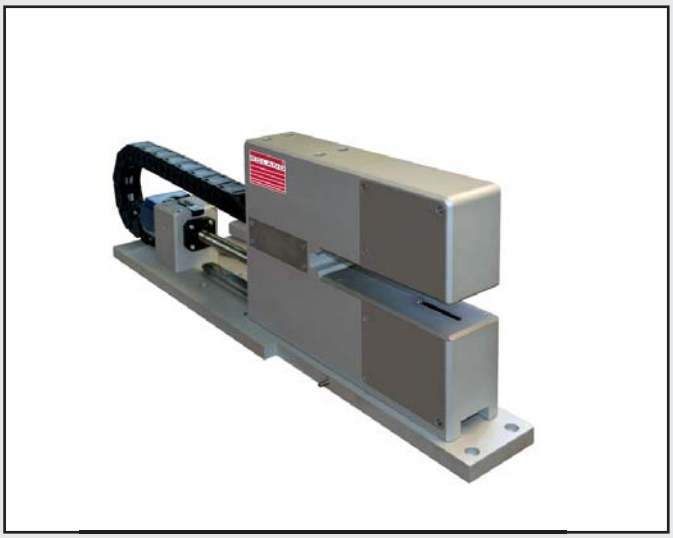

LTM-SMART Thickness Gauging System

LTM-TOUCH

The **LTM-SMART** Thickness Gauging System has been specially developed for high-speed coil-strip material in strip processing lines, the system is used to check the material thickness before and after the processing in order to provide process control default values.
Due to the high sampling frequency, the LTM-SMART system is also used e.g. in the flexible roll forming of „Tailored Rolled Blanks“ material, roll profiling, punching and in tube manufacturing.

The LTM-SMART high-performance measuring system enables non-contact strip thickness measurement using two triangulation laser sensors. The combination of a linear axis with stepper motor enables the recording of both a static and a dynamic measurement.

The following measurement modes can be realized:
• Line measurement
• Micro-traversing
• Macro-travering
• Macro-traversing with track measurement

During the development of the mechanical components, great emphasis was placed on a very high bending and vibration stiffness with a high resistance to temperature fluctuations and is subsequently guaranteed. The connection to the customer‘s control concept is made either via a Profibus or Profinet. On a separate data interface, all relevant measurement data, e.g. is in CSV format.

The integrated calibration unit inclusive the associated measuring standard and the temperature sensor enable the fully automatic adjustment of the system and thus the respective adaptation to changing environmental conditions. The tool used to determine the measuring capability, which is implemented within the LTM-S operating software, enables continuous monitoring of the thickness gauge to ensure that the required conditions are met.

The ROLAND operating software (internal client) **LTM-S** enables a simple, self - explanatory and reliable operation of the measuring system. Graphical evaluation tools allow the user a quick visual assessment of the corresponding measurement results.

Components

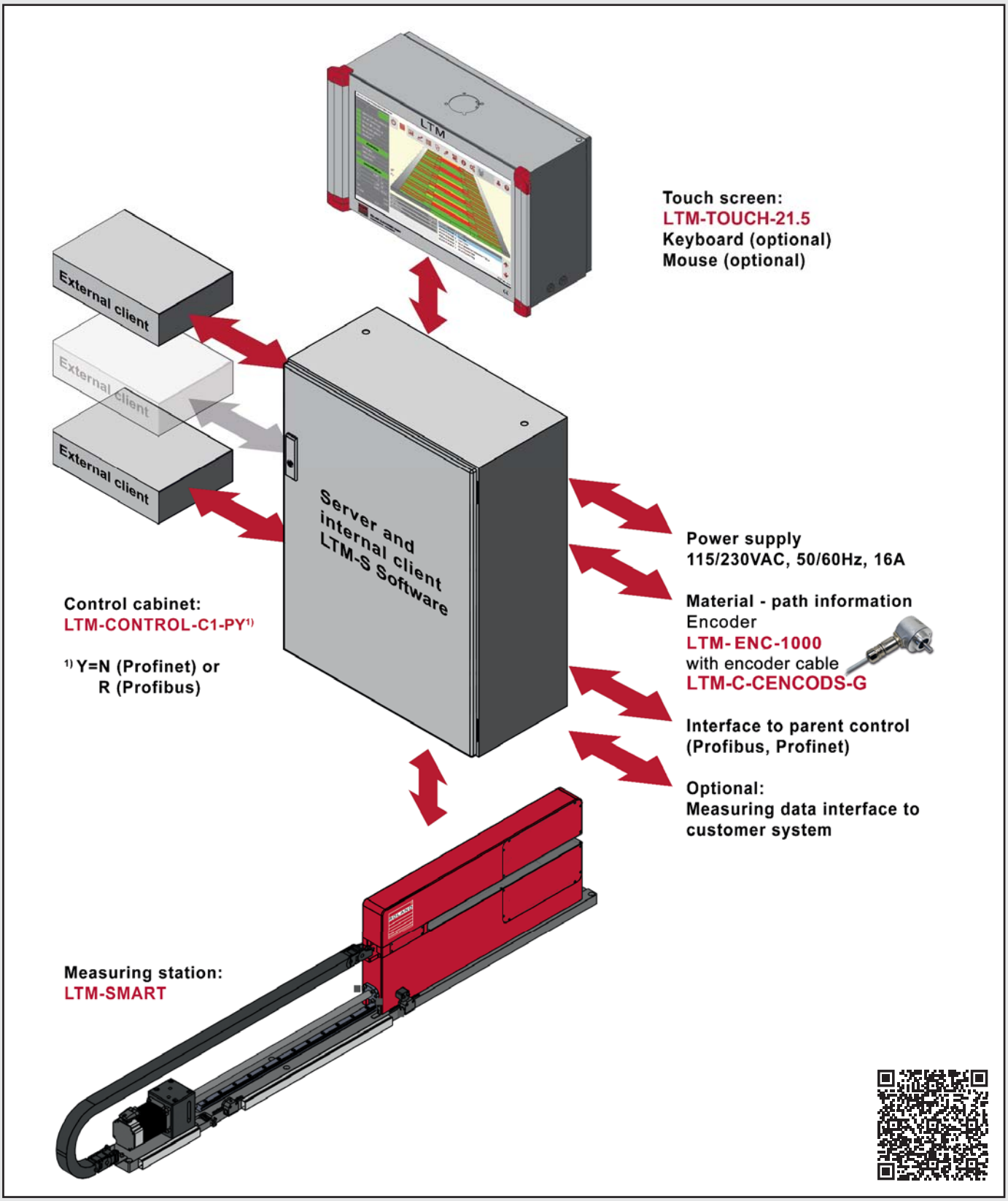

Components of the Thickness Gauging System LTM-SMART

LTM-SMART

Dimensions

Dimension sheet of the measuring station LTM-SMART

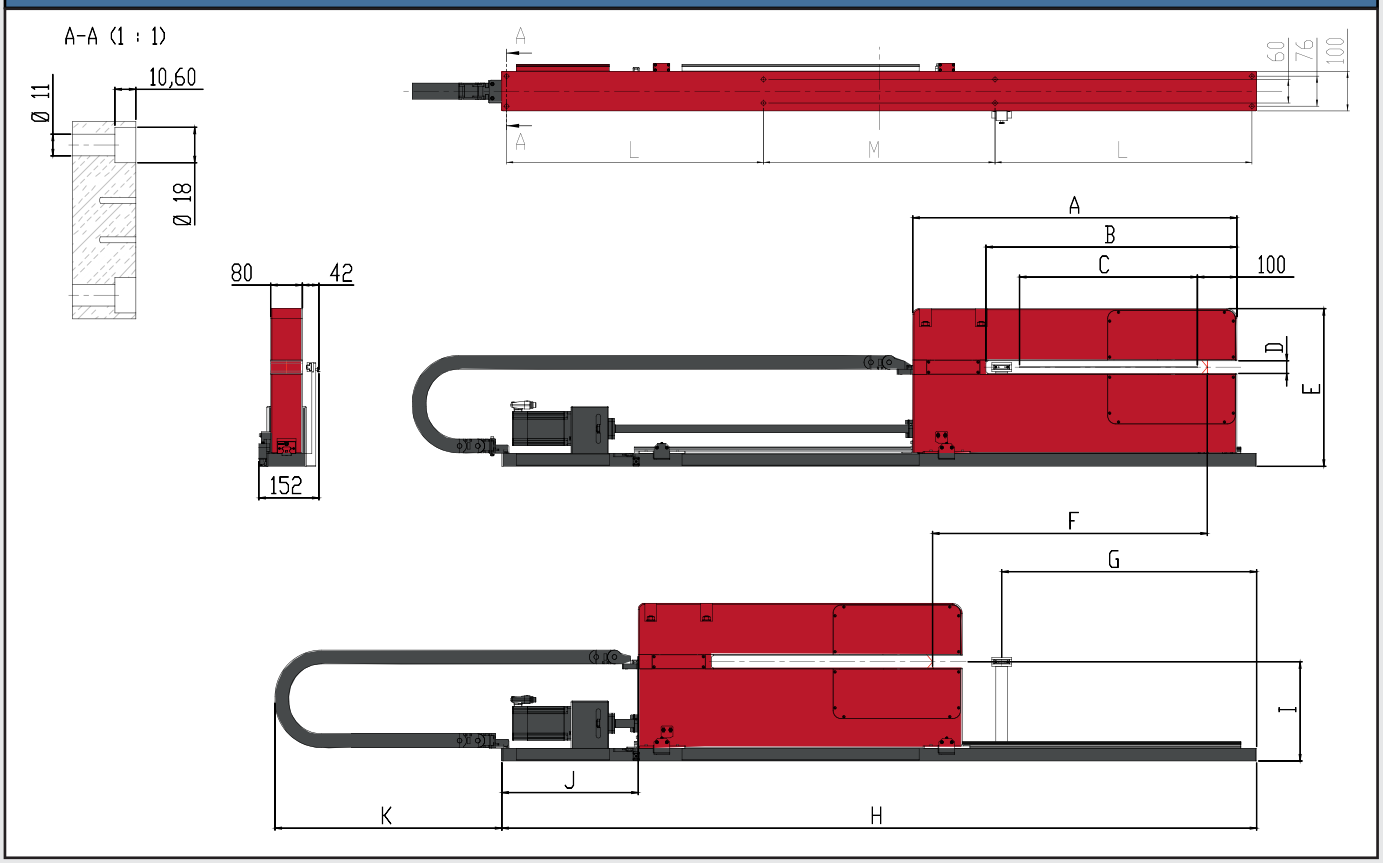

Dimensions of LTM-SMART (All information in mm)

LTM-SMART configuration table

LTM Variant/ Dimension	150-06	300-06	450-06	150-20	300-20	450-20
Measuring jaw length A	520	670	820	520	670	820
Fork depth B	335	485	635	335	485	635
Max. measuring distance C	150	300	450	150	300	450
Fork width D	32	32	32	66	66	66
Total height E	399	399	399	433	433	433
Max. travelling distance F	395	545	695	395	545	695
Position calibration unit G	345	495	645	345	495	645
Total length base plate H	1310	1610	1910	1310	1610	1910
Measurement range center I	251	251	251	268	268	268
Start travelling range J, approx.	345	345	345	345	345	345
Cable carrier overhang K, approx.	424	499	574	424	499	574
Distance between drilled holes L	450	550	650	450	550	650
Distance between drilled holes M	386	486	586	386	486	586

Configuration table of the Thickness Gauging System LTM-SMART (All information in mm)

LTM-SMART

■ Order information

Designation	Part name	Description
Control cabinet with server and internal client, as well as the necessary pneumatic units	**LTM-CONTROL-C1-PY[1)]**	Rittal compact control cabinet 800mm x 600mm x 350mm with all necessary electrical hardware components to realize the measurement task. • Beckhoff Industrial PC CX5140 with operating system and I/O module mounted on TwinCat, Profinet or Profibus interface, license clamp etc. • Measurement controller / Laser control unit for two laser separation distance sensors. • Integrated interface for control from the customer's side Y[1)]), Profibus or Profinet. • Server and client software LTM-S with recipe database, measurement mode selection, profile and trend display, user administration, etc. • With all the necessary electrical connections for the C-Frames, reference and limit switches etc. on the terminal strip. • Separate accessories, such as pressure switch for air purge.
Measuring C-frame version LTM-SMART	**LTM-SMART-XXX[2)]-ZZ[3)]**	Measuring C-frame with linear axis, a maximum possible measuring range of XXX[2)] mm, stepper motor, two separation distance sensors (triangulation lasers), calibration unit and all other necessary units to enable the measuring task (except control and operation). The measuring yoke consists of the following components: • Anti-vibration and rigid C-frame made from solid Aluminum construction. • Linear axis with guide and ball screw, as well as a stepper motor with encoder to ensure the traverse movement of the C-frame. • 2 separation distance sensors (triangulation lasers) with a measuring range of ZZ[3)] mm. • Temperature sensors, end and reference switches. • Integrated calibration unit with quick change adapter for the supplied measuring standard • Laser air purge unit
Connection cables	**LTM-C-SCSENSS-GG**	Connection cable for the C-frame (sensors) LTM-SMART to the control cabinet type LTM-Control-C1-PY[1)]. • 2 pieces per C-frame as required for a LTM-SMART. • One end with circular connector for connection to the sensor, the other end with rectangular connector for connection to the measuring controller • Standard length 10m[4)].
	LTM-C-CABLE-SET	Connection cable for the drive unit of the C-frame of LTM-SMART to the control cabinet LTM-Control-C1-PY[1)] consisting of: • 1 piece of motor power and control cable for connecting the LTM-SMART to the control cabinet LTM-CONTROL-C1-PY[1)]. • 2 piece limit switch cable for connecting the LTM-SMART to the control cabinet LTM-CONTROL-C1-PY[1)] • 1 piece reference switch cable for connecting the LTM-SMART to the control cabinet LTM-CONTROL-C1-PY[1)] • Standard length 5m[4)].
	LTM-C-CENCODS-G (Option)	Connection cable for encoder to the ROLAND system, with straight M23 cable socket equipped for connection to the encoder and prepared at the other end for terminal connection in the control cabinet. Standard length 5m[4)].
Option Control unit	**LTM-TOUCH-21.5**	21.5" touch monitor for displaying and operating the internal client LTM-S • Rittal compact control cabinet 600mm x 380mm x 200mm with all necessary electrical hardware components, incl. 2 x USB port 3.0. • 21.5" touch monitor, mounted in the control cabinet. • With cable set 5m[4)] for connection to the corresponding control cabinet LTM-CONTROL-C1-PY[1)].
Option Encoder	**LTM-ENC-1000**	Installation in the customer's system to generate the necessary travel signals with clamping flange 58mm and a shaft diameter of 10mm. Optionally, if no route information can be provided by the customer.

[1)] Interface to customer control: Y = N - Profinet, Y = R - Profibus
[2)] Maximum measuring distance XXX = 150mm or 300mm or 450mm.
[3)] Measuring range ZZ = 06mm (± 3mm) respectively 20mm (± 10mm)
[4)] Other lengths upon request.

Order information for LTM-SMART

LTM-MAXI

■ LTM-MAXI

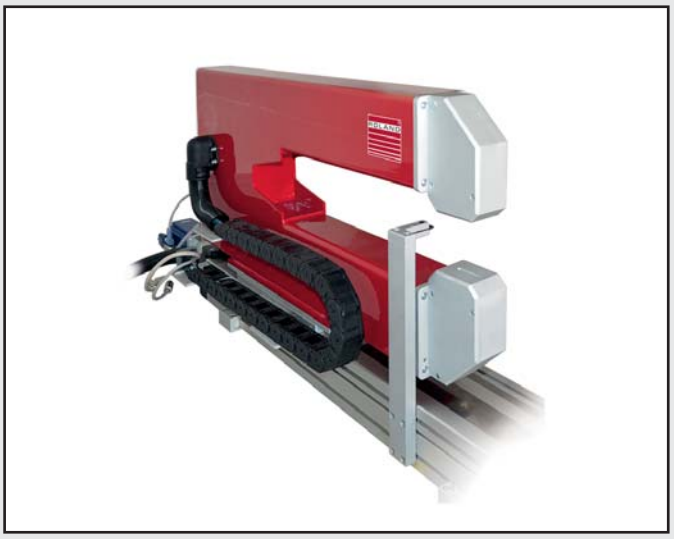

Thickness Gauging System LTM-MAXI

LTM-TOUCH

The **LTM-MAXI** Thickness Gauging System has been specially developed for high-speed coil-strip material in strip processing lines, the system is used to check the material thickness before and after the processing in order to provide process control default values.
Due to the high sampling frequency, the LTM-MAXI system is also used e.g. in the flexible roll forming of „Tailored Rolled Blanks“ material, roll profiling, punching and in tube manufacturing. The LTM-MAXI high-performance measuring system enables non-contact strip thickness measurement using two triangulation laser sensors. The combination of a linear axis with stepper motor enables the recording of both a static and a dynamic measurement. A measuring range up to 1000 mm can thus be realized.

The following measurement modes can be realized:
• Line measurement
• Micro-traversing
• Macro-traversing
• Macro-traversing with track measurement

During the development of the mechanical components, great emphasis was placed on a very high bending and vibration stiffness with a high resistance to temperature fluctuations and is subsequently guaranteed.
The connection to the customer‘s control concept is made either via a Profibus or Profinet.
On a separate data interface, all relevant measurement data, e.g. is in CSV format.

The integrated calibration unit inclusive the associated measuring standard and the temperature sensor enable the fully automatic adjustment of the system and thus the respective adaptation to changing environmental conditions. The tool used to determine the measuring capability, which is implemented within the LTM-S operating software, enables continuous monitoring of the thickness gauge to ensure that the required conditions are met.

The ROLAND operating software (internal client) **LTM-S** enables a simple, self - explanatory and reliable operation of the measuring system. Graphical evaluation tools allow the user a quick visual assessment of the corresponding measurement results.

LTM-MAXI

Components

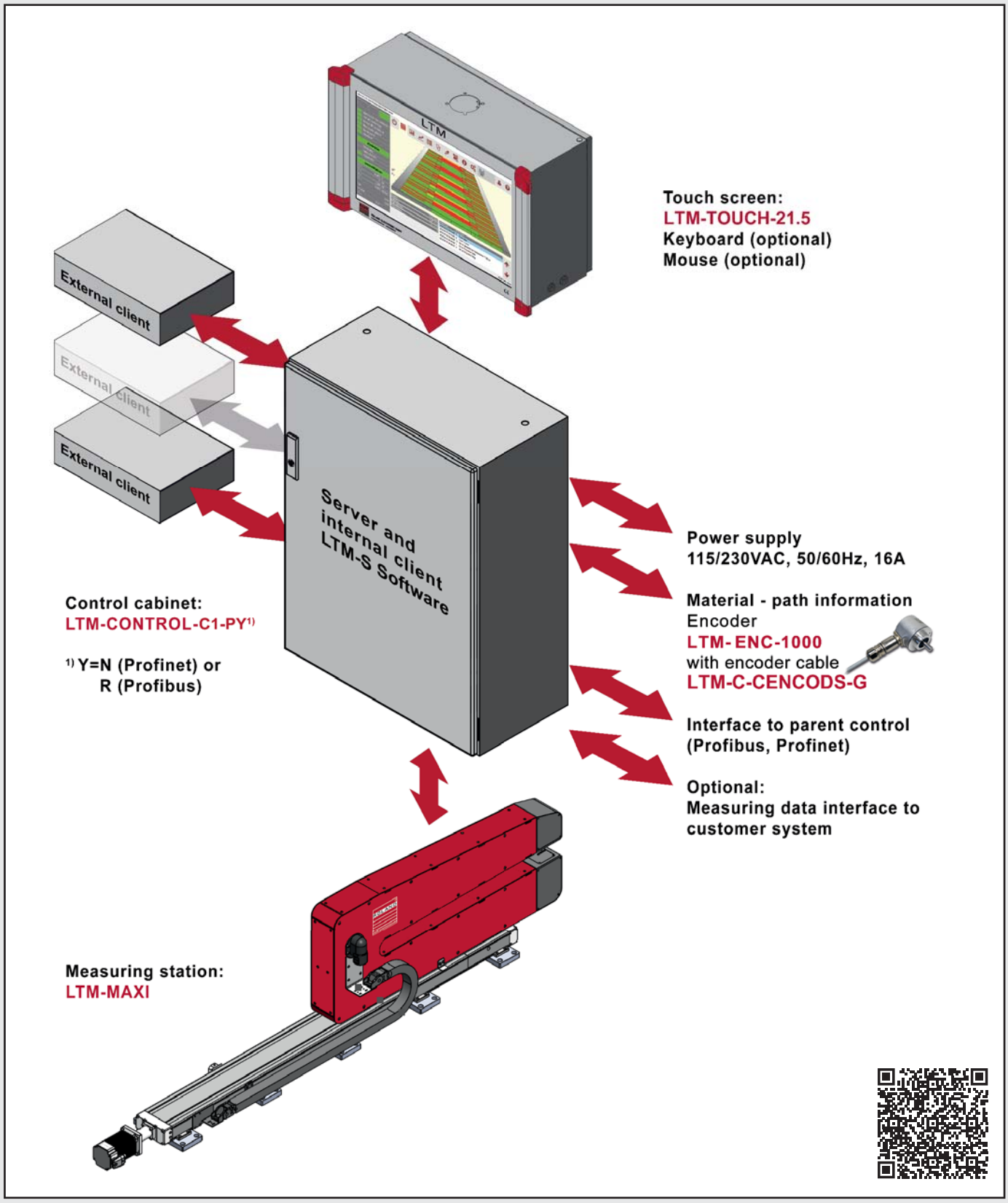

Components of theThickness Gauging System LTM-MAXI

LTM-MAXI

Dimensions

Dimension sheet of the measuring station LTM-MAXI

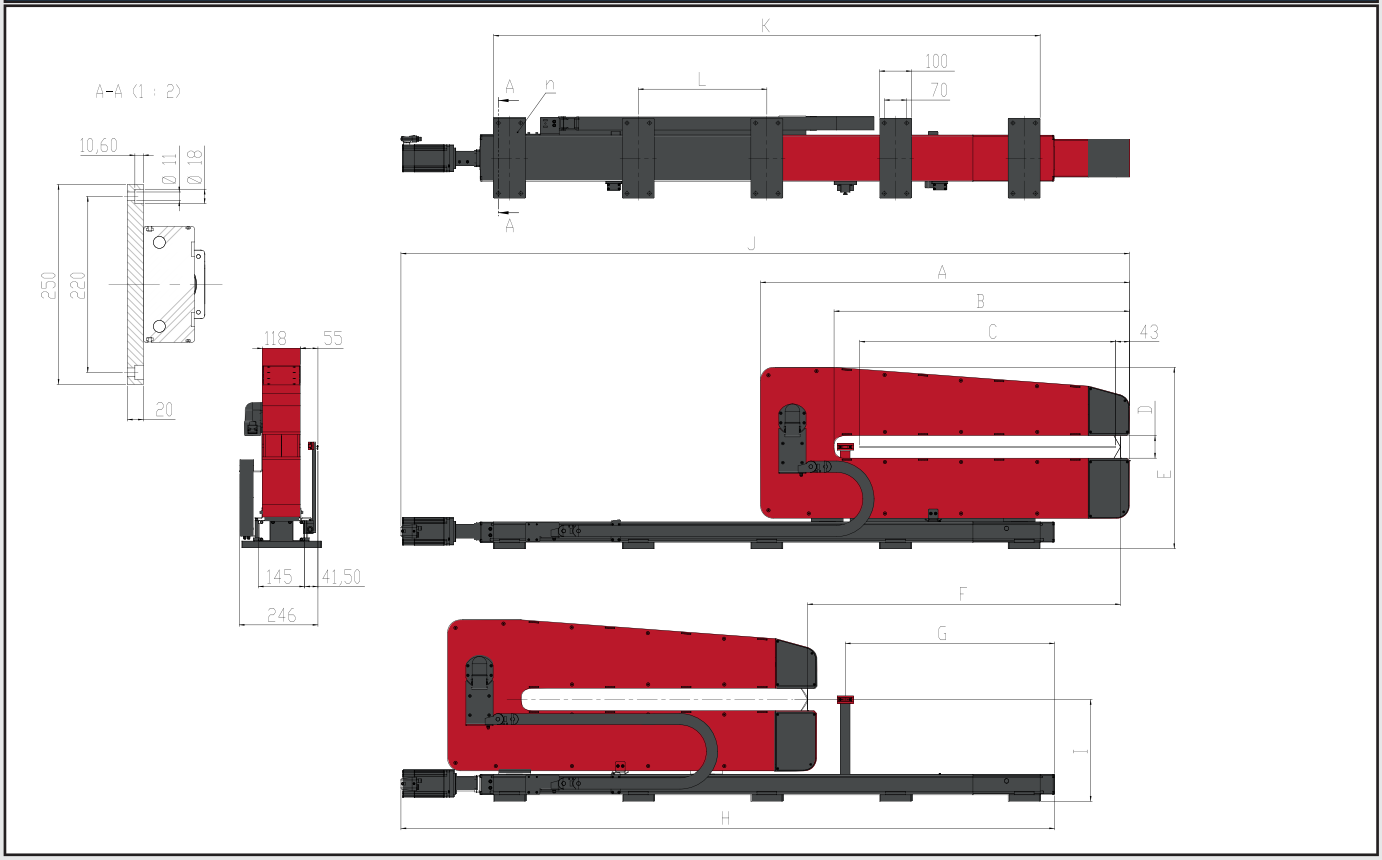

Dimension sheet LTM-MAXI (All information in mm)

LTM-MAXI configuration table

LTM Variant/ Dimension	300-20	450-20	600-20	800-20	1000-20
Measuring jaw length A	653	803	953	1153	1353
Fork depth B	423	573	723	923	1123
Max. measuring distance C	300	450	600	800	1000
Fork width D	70	70	70	70	70
Total height E	567	567	567	567	567
Max. travelling distance F	478	628	778	978	1178
Position calibration unit G	269	388	484	654	800
Total length base plate H	1242.5	1492.5	1692.5	2042.5	2342.5
Measurement range center I	318	318	318	318	318
Start travelling range J	1361.5	1642.5	1896.5	2276.5	2630.5
Cable carrier overhang K	908	1158	1358	1708	2008
Distance betw. drilled holes L	2 x 404	2 x 529	4 x 314.5	4 x 402	4 x 477
Number of mounting plates n	3	3	5	5	5

Configuration table of the Thickness Gauging System LTM-MAXI (All information in mm)

LTM-MAXI

■ Order information

Designation	Part name	Description
Control cabinet with server and internal client, as well as the necessary pneumatic units	**LTM-CONTROL-C1-PY[1)]**	Rittal compact control cabinet 800mm x 600mm x 350mm with all necessary electrical hardware components to realize the measurement task. • Beckhoff Industrial PC CX5140 with operating system and I/O module mounted on TwinCat, Profinet or Profibus interface, license clamp etc. • Measurement controller / Laser control unit for two laser separation distance sensors. • Integrated interface for control from the customer's side Y[1)]), Profibus or Profinet. • Server and client software LTM-S with recipe database, measurement mode selection, profile and trend display, user administration, etc. • With all the necessary electrical connections for the C-Frames, reference and limit switches etc. on the terminal strip. • Separate accessories, such as pressure switch for air purge.
Measuring C-frame version LTM-MAXI	**LTM-MAXI-XXXX[2)]-20**	Measuring C-frame with linear axis, a maximum possible measuring range of XXXX[2)] mm, stepper motor, two separation distance sensors (triangulation lasers), calibration unit and all other necessary units to enable the measuring task (except control and operation). The measuring yoke consists of the following components: • Anti-vibration and rigid C-frame made from solid steel welded construction. • Linear axis with guide and ball screw, as well as a stepper motor with encoder to ensure the traverse movement of the C-frame. • 2 separation distance sensors (triangulation lasers) with a measuring range of 20mm (± 10mm). • Temperature sensors, end and reference switches. • Integrated calibration unit with quick change adapter for the supplied measuring standard • Laser air purge unit
Connection cables	**LTM-C-SCSENSS-GG**	Connection cable for the C-frame (sensors) LTM-MAXI to the control cabinet type LTM-Control-C1-PY[1)]. • 2 pieces per C-frame as required for a LTM-MAXI. • One end with circular connector for connection to the sensor, the other end with rectangular connector for connection to the measuring controller • Standard length 10m[3)].
	LTM-C-CABLE-SET	Connection cable for the drive unit of the C-frame of LTM-MAXI to the control cabinet LTM-Control-C1-PY[1)] consisting of: • 1 piece of motor power and control cable for connecting the LTM-MAXI to the control cabinet LTM-CONTROL-C1-PY[1)]. • 2 piece limit switch cable for connecting the LTM-MAXI to the control cabinet LTM-CONTROL-C1-PY[1)] • 1 piece reference switch cable for connecting the LTM-MAXI to the control cabinet LTM-CONTROL-C1-PY[1)] • Standard length 5m[3)].
	LTM-C-CENCODS-G (Option)	Connection cable for encoder to the ROLAND system, with straight M23 cable socket equipped for connection to the encoder and prepared at the other end for terminal connection in the control cabinet. Standard length 5m[3)].
Option Control unit	**LTM-TOUCH-21.5**	21.5" touch monitor for displaying and operating the internal client LTM-S • Rittal compact control cabinet 600mm x 380mm x 200mm with all necessary electrical hardware components, incl. 2 x USB port 3.0. • 21.5" touch monitor, mounted in the control cabinet. • With cable set 5m[3)] for connection to the corresponding control cabinet LTM-CONTROL-C1-PY[1)].
Option Encoder	**LTM-ENC-1000**	Installation in the customer's system to generate the necessary travel signals with clamping flange 58mm and a shaft diameter of 10mm. Optionally, if no route information can be provided by the customer.

[1)] Interface to customer control: Y = N - Profinet, Y = R - Profibus
[2)] Maximum measuring distance XXXX = 300mm or 450mm or 600mm or 800mm or 1000mm.
[3)] Other lengths upon request.

Order information for LTM-MAXI

Glossary

Calibration	Calibration refers to a series of operations performed to ascertain differences between actual equipment values and reference values.[1)]
Dynamic Thickness Gauging System	At the dynamic measuring system, the measuring point changes its position in the whole system, depending on time or path.
Linearity	Linearity is an indicator of a measurement system‘s capability. The value represents the maximum error value between an ideal value and the actual measurement result. For example, when a target is moved 1 mm using a measurement system with a linearity of ±5µm, the displayed value is said to possibly include an error margin of ±5µm (e.g., 9.995µm to 1.005µm). [1)]
Line measuring	The measuring system remains in the static mode. The Y coordinate of the measuring system remains unchanged during the measuring process. As the material travels in the X direction, thickness measuring values are taken along a straight line.
Macro traversing	At macro traversing, the Y coordinate of the measuring system changes dynamical. The system oscillates back and forth between two fixed Y coordinates (Y1 and Y2) at constant speed.The two coordinates Y1 and Y2 result from the two edges of the current material to be measured. Only the movement of the material in X direction produces Thickness Gauging values along a sinusoidal line. The measurement is performed over the whole width of the material.
Macro traversing with track measuring	The macro traversing with track measuring basically works like macro traversing. In addition, the material width to be measured can be subdivided into more tracks with the LTM-S measuring software. Each track has two unique Y coordinates (YS, YE) that determine the track width. This makes it possible to hide tracks (partial areas) during the measurement or to include only relevant tracks for further processing in the measuring data analysis.
Material speed	Thickness Gauging by using laser technology can only take place with a relative movement between the material to be measured and the lasers. It describes the speed at which the material moves in relation to the laser sensors.
Measuring accuracy	The measuring accuracy of a Thickness Gauging System provides information about how accuracy is achieved in order to respect the specified tolerances within a reliable measuring.
Measuring center	The measuring center point is defined as the point or dimension in which both laser beams (Z direction) meet at an optimal measuring distance. The reference is always the lower edge of the measuring system.
Measuring density	Depending on the customer‘s application and the corresponding dimensions of the measuring system, lasers with a defined sampling rate are used. Using the sampling rate [Hz] and the material speed [m/ s] known by the customer, the measuring density (number of measured alues per path) can be calculated.
Measuring distance	The measuring distance is the distance range between laser to the material (Z-direction) in which a plausible measuring data acquisition is possible. The goal ist o guide the material to be measured along the lasers with a constant distance. Ideally, the distance between laser and material should be identical to the optimal measuring distance.
Measuring modes	Depending on the requirements or the selected Thickness Gauging System, a wide range of measuring modes are possible. These can be selected in the Roland LTM measurement software and stored depending on the product. Basically, dynamic measurement systems (LTM-SMART, LTM-MAXI) offer a wider choice of measurement modes. ROLAND Thickness Gauging Systems allow following measurement modes, according to each type: • Line measurement • Micro-Traversing • Macro-Taversing with track measurement • Macro-Traversing

Glossary

Measuring range	The measuring range is the range that a sensor can perform measuring. Measuring ranges are generally written as ±xxmm based on the reference distance. [1)]
Measuring system analysis according to method 1	In order to comply the measuring quality, the accuracy or correctness of the measurement during the production process, the Roland LTM-BASE, LTM-SMART and LTM-MAXI Thickness Gauging Systems are equipped with a corresponding software tool to perform the measuring system analysis according to method 1.
Micro traversing	During micro - traversing the Y - coordinate of the measuring system changes dynamically. The system oscillates back and forth between two freely selectable Y coordinates (Y1 and Y2) at a constant speed. The resulting traversing path is always smaller than the current bandwidth or material width. As the material moves in the X direction, thickness measurements are taken along a sinusoidal line.
Reference distance	The reference distance is the sensor heads default zero point. This is commonly represented as the distance from the bottom of the sensor head to the center of the measuring range.[1)]
Repeatability	Repeatability represents the overall difference in a measurement value taken at the same location on a target. [1)]
Sampling frequency / Sampling speed	The sampling frequency / sampling speed represents the number of data points the measurement system can measure per second. A measurement system with a sampling frequency of 100Hz can perform 100 measurements in 1 second. Measurement systems with faster sampling frequencies are capable of providing more accurate target measurements with inline measurement, and because multiple averaging processes can be performed at once, measurements will be stable. [1)]
Static Thickness Gauging System	At the static measuring system, the measuring point remains unchanged in relation to the whole production line system.
Thickness Gauging Software LTM-S	The LTM-S (internal client) Thickness Gauging Software supplied with the LTM-BASE, LTM-SMART and LTM-MAXI systems includes all the tools necessary to operate, to process, to display and to provide the recorded thickness gauging values.
Triangulation Method	A laser hits the target, light reflected off of the target is concentrated through the receiving lens and is focused onto the light receiving element. If the distance from the sensor to the target changes, the angle of the reflected light changes causing the position of the received light to change on the light receiving element. This change is proportional to the movement amount of the target, because we know the distance between each position on the light receiving element we are able to determine displacement. [1)]
Unit Passing Line	The unit passing line defines the dimension which results from the distance between the reference edge of the unit (Z direction) and the measuring center point minus half the material thickness. As a measure of the material thickness, the most commonly measured nominal thickness is used.
Working area	The working area is defined as the area (Z direction) in which the material to be measured may move to the working position in order to ensure a plausible measurement data recording. The working area can not be fully utilized.

[1)] Courtesy of: Keyence, „Measurement library“, https://www.keyence.com/ss/products/measure/measurement_library

ROLAND ELECTRONIC

Our core competencies are: Magnetic Flux, Eddy Current and Induction. With these technologies, we build sensors for very special detection tasks. We use state-of-the-art lasers where the advantages of optical technology are required.

Product lines

Systems for Double Sheet Detection, Sheet Thickness Gauging, Weld Seam Detection, Systems for Non Destructive Testing, Steel Cord Inspection Systems

Revision 1.1, November 2018 - Subject to technical modification and error

ROLAND ELECTRONIC GMBH

Otto-Maurer-Strasse 17 75210 Keltern / Germany
phone: +49 7236 9392-0 fax: +49 7236 9392-33
info@roland-electronic.com www.roland-electronic.com